EC-i 52 ∅52 mm, brushless, 420 watt

Ventilated

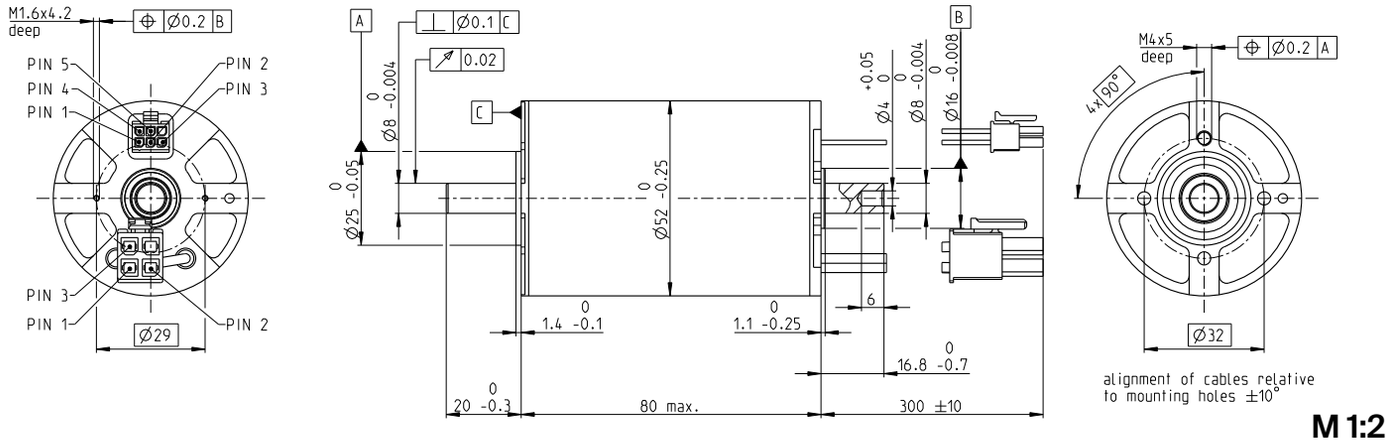

M 1:2

Stock program
Standard program
Special program (on request)

Part numbers

with Hall sensors	667064	667065	667066	633919
Motor data				
Values at nominal voltage				
1 Nominal voltage V	18	24	36	48
2 No load speed rpm	4450	4860	5010	5090
3 No load current mA	829	707	493	379
4 Nominal speed rpm	3470	3800	3910	3990
5 Nominal torque mNm	904	972	1050	1020
6 Nominal current (max. continuous current) A	21	18.3	13.3	9.94
7 Stall torque mNm	4290	4560	4860	4830
8 Stall current A	273	278	232	174
9 Max. efficiency %	89.1	90	90.8	90.7
Characteristics				
10 Terminal resistance phase to phase Ω	0.0658	0.0863	0.155	0.276
11 Terminal inductance phase to phase mH	0.0826	0.123	0.261	0.45
12 Torque constant mNm/A	38.2	46.7	68	89.2
13 Speed constant rpm/V	250	204	140	107
14 Speed/torque gradient rpm/mNm	0.43	0.377	0.32	0.331
15 Mechanical time constant ms	0.765	0.671	0.57	0.59
16 Rotor inertia gcm²	170	170	170	170

Specifications

Thermal data

17 Thermal resistance housing-ambient	1.9 K/W
18 Thermal resistance winding-housing	0.365 K/W
19 Thermal time constant winding	8.78 s
20 Thermal time constant motor	714 s
21 Ambient temperature	-40...+100°C
22 Max. winding temperature	+155°C

Mechanical data (preloaded ball bearings)

23 Max. speed	6000 rpm
24 Axial play at axial load < 9.0 N	0 mm
> 9.0 N	0.14 mm
25 Radial play	preloaded
26 Max. axial load (dynamic)	12 N
27 Max. force for press fits (static)	150 N
(static, shaft supported)	6000 N
28 Max. radial load, 5 mm from flange	110 N

Other specifications

29 Number of pole pairs	8
30 Number of phases	3
31 Weight of motor	752 g

Values listed in the table are nominal.

Connection motor (Cable AWG 14)

red	Motor winding 1	Pin 1
black	Motor winding 2	Pin 2
white	Motor winding 3	Pin 3
	N.C.	Pin 4

Connector	**Article number**
Molex	171692-0104

Connection sensor (Cable AWG 26)

yellow	Hall sensor 1	Pin 1
brown	Hall sensor 2	Pin 2
grey	Hall sensor 3	Pin 3
blue	GND	Pin 4
green	V_{Hall} 4.5...24 VDC	Pin 5
	N.C.	Pin 6

Connector	**Article number**
Molex	430-25-0600

Wiring diagram for Hall sensors see p. 69

Operating range

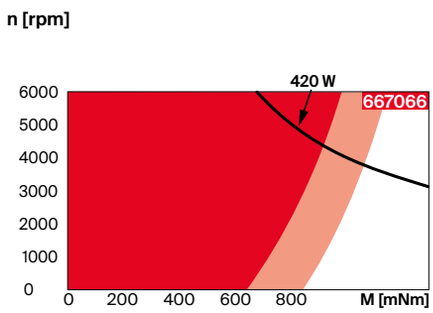

Continuous operation
Continuous operation with reduced thermal resistance R_{th2} 50%
Intermittent operation

Assigned power rating

Comments

Modular system

Details on catalog page 52

Sensor
509_ENX 16 EASY
510_ENX 16 EASY XT
511_ENX 16 EASY Absolute
512_ENX 16 EASY Absolute XT
519_ENX 16 RIO

Motor Control
553_ESCON 70/10
558_ESCON2 Module 60/30
559_ESCON2 Compact 60/30

© 2025 maxon. All rights reserved. March edition. Subject to change.