EC-i 30 ∅30 mm, brushless, 50 watt

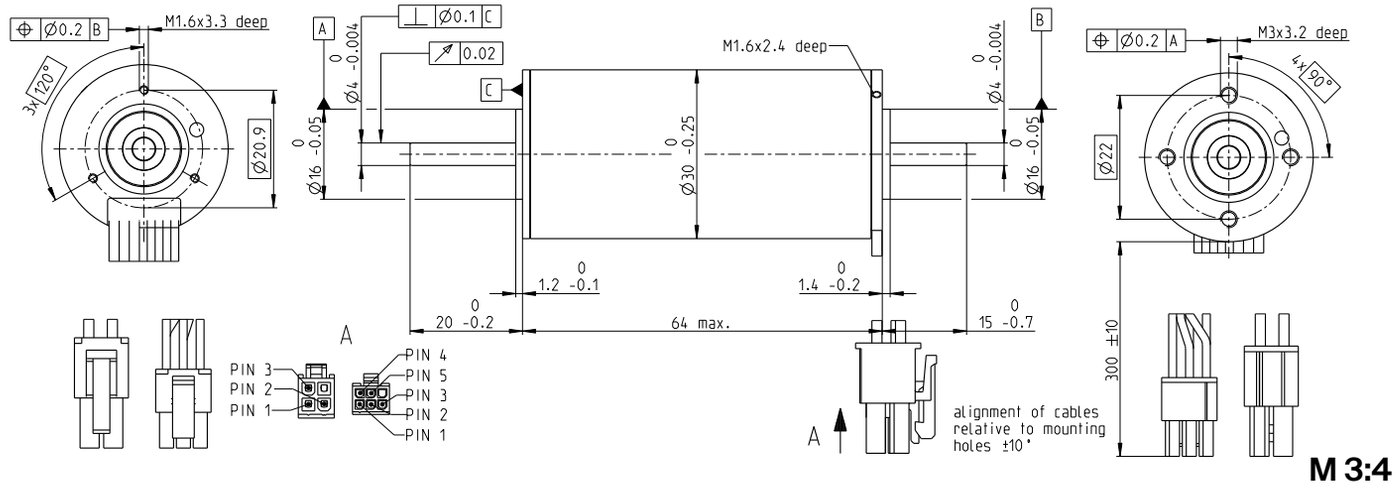

Stock program
Standard program
Special program (on request)

Part numbers

with Hall sensors	539476	539477	539478	539479
Motor data (provisional)				
Values at nominal voltage				
1 Nominal voltage V	12	24	36	48
2 No load speed rpm	9950	9960	10300	10200
3 No load current mA	328	164	114	84.4
4 Nominal speed rpm	8730	8830	9140	9100
5 Nominal torque mNm	55.3	55.2	53.2	58.7
6 Nominal current (max. continuous current) A	4.95	2.47	1.64	1.34
7 Stall torque mNm	576	624	626	703
8 Stall current A	58.1	32.6	22.5	20.1
9 Max. efficiency %	85.4	86.2	86.2	87.3
Characteristics				
10 Terminal resistance phase to phase Ω	0.206	0.735	1.6	2.39
11 Terminal inductance phase to phase mH	0.119	0.475	1.01	1.82
12 Torque constant mNm/A	11.4	22.8	33.2	44.6
13 Speed constant rpm/V	837	418	288	214
14 Speed/torque gradient rpm/mNm	15.1	13.5	13.9	11.5
15 Mechanical time constant ms	2.19	1.95	2	1.66
16 Rotor inertia gcm²	13.8	13.8	13.8	13.8

Specifications

Thermal data

17	Thermal resistance housing-ambient	9.01 K/W
18	Thermal resistance winding-housing	2.46 K/W
19	Thermal time constant winding	31.2 s
20	Thermal time constant motor	1080 s
21	Ambient temperature	-40...+100°C
22	Max. winding temperature	+125°C

Mechanical data (preloaded ball bearings)

23	Max. speed	15 000 rpm
24	Axial play at axial load < 9.0 N	0 mm
	> 9.0 N	0.14 mm
25	Radial play	preloaded
26	Max. axial load (dynamic)	5 N
27	Max. force for press fits (static)	98 N
	(static, shaft supported)	1300 N
28	Max. radial load, 5 mm from flange	25 N

Other specifications

29	Number of pole pairs	2
30	Number of phases	3
31	Weight of motor	240 g

Values listed in the table are nominal.

Connection motor (Cable AWG 20)

red	Motor winding 1	Pin 1
black	Motor winding 2	Pin 2
white	Motor winding 3	Pin 3
	N.C.	Pin 4

Connector	**Article number**
Molex	39-01-2040

Connection sensors (Cable AWG 26)

yellow	Hall sensor 1	Pin 1
brown	Hall sensor 2	Pin 2
grey	Hall sensor 3	Pin 3
blue	GND	Pin 4
green	V_{Hall} 4.5...24 VDC	Pin 5
	N.C.	Pin 6

Connector	**Article number**
Molex	430-25-0600

Wiring diagram for Hall sensors see p. 69

Operating range

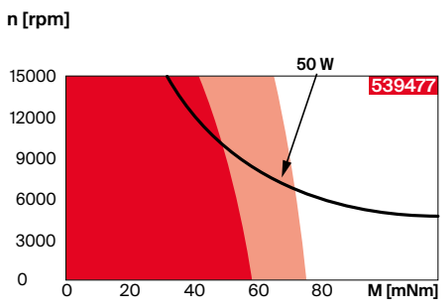

Comments

Continuous operation
Continuous operation with reduced thermal resistance R_{th2} 50%
Intermittent operation

Assigned power rating

Modular system

Details on catalog page 52

Gear
430_GP 32 C
474–482_GP 32 S

Sensor
509_ENX 16 EASY
510_ENX 16 EASY XT
511_ENX 16 EASY Absolute
512_ENX 16 EASY Absolute XT
518_ENX 22 EMT
519_ENX 16 RIO

Motor Control
547_DEC Module 50/5
551_ESCON 36/3 EC
551_ESCON Module 50/4 EC-S
551_ESCON Module 50/5
553_ESCON 50/5
557_ESCON2 Micro 60/5
563_EPOS4 Micro 24/5
564_EPOS4 Module 50/5
565_EPOS4 Compact 24/5 3-axes
567_EPOS4 Compact 50/5
569_EPOS4 50/5
570_EPOS4 Disk 60/8
571_EPOS4 Disk 60/12

© 2025 maxon. All rights reserved. March edition. Subject to change.