maxon

EC frameless DT

Dynamic Torque

Installation Manual

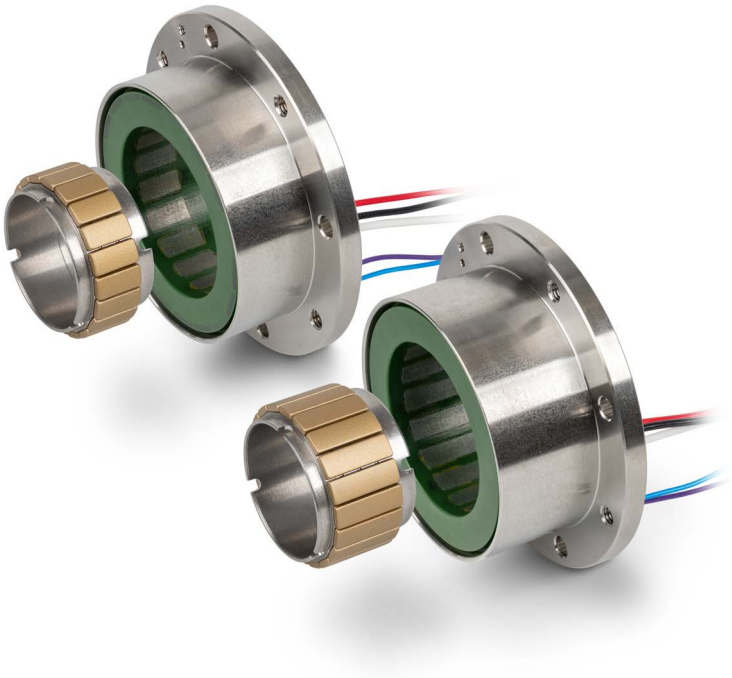

maxongroup.com

TABLE OF CONTENTS

1 GENERAL INFORMATION 5

1.1 About this document . . . 5
1.2 About the device . . . 6
1.3 About the safety precautions . . . 7

2 SPECIFICATIONS 9

2.1 Technical Data . . . 9
2.2 Dimensional Drawings . . . 11
2.3 Nameplate . . . 11
2.4 Standards . . . 11

3 INSTALLATION 13

3.1 General Rules . . . 14
3.2 Design Guidelines . . . 15
3.3 Mechanical Installation . . . 17
3.4 Electrical Installation . . . 19

4 MAINTENANCE 21

DECLARATION OF INCORPORATION 23

LIST OF FIGURES 24

LIST OF TABLES 25

READ THIS FIRST

BY PRINCIPLE, THE «EC FRAMELESS DT» COMPRISES PARTS THAT PRODUCE STRONG MAGNETIC FIELDS. IT IS THEREFORE MOST IMPORTANT THAT YOU ARE AWARE OF THE CONSEQUENCES OF THESE MAGNETIC FORCES, THAT YOU TAKE THE APPROPRIATE PRECAUTIONARY MEASURES, AND THAT YOU COMMUNICATE THIS FACT TO PERSONS IN YOUR VICINITY!

These instructions are intended for qualified technical personnel. Prior commencing with any activities*…*

- *you must carefully read and understand this manual and*
- *you must follow the instructions given therein.*

The «EC frameless DT» *is considered as partly completed machinery according to EU Directive 2006/42/EC, Article 2, Clause (g) and* ***is intended to be incorporated into or assembled with other machinery or other partly completed machinery or equipment****.*
Therefore, you must not put the device into service*,…*

- *unless you have made completely sure that the other machinery fully complies with the EU directive's requirements!*
- *unless the other machinery fulfills all relevant health and safety aspects!*
- *unless all respective interfaces have been established and fulfill the herein stated requirements!*

INDEX 26
APPENDIX 27

••page intentionally left blank••

1 GENERAL INFORMATION

1.1 About this document

1.1.1 Intended purpose

The purpose of the present document is to familiarize you with the direct drive «EC frameless DT». It will highlight the tasks for safe and adequate installation and/or commissioning. Follow the described instructions …

- to avoid dangerous situations,
- to keep installation and/or commissioning time at a minimum,
- to increase reliability and service life of the described equipment.

1.1.2 Target audience

The present document is intended for trained and skilled personnel. It conveys information on how to understand and fulfill the respective work and duties.

1.1.3 How to use

Throughout the document, the following notations and codes will be used.

Notation	Meaning
(n)	refers to an item (such as part number, list item, etc.)
➔	denotes “see”, “see also”, “take note of” or “go to”
Color coding	find information on the colors used on page 13

Table 1-1 Notation used

1.1.4 Symbols & signs

This document uses the following symbols and signs:

Type	Symbol	Meaning
Safety alert DANGER		Indicates an **imminent hazardous situation**. If not avoided, it **will result in death or serious injury.**
WARNING		Indicates a **potential hazardous situation**. If not avoided, it **can result in death or serious injury.**
CAUTION		Indicates a **probable hazardous situation** or calls the attention to unsafe practices. If not avoided, it **may result in injury.**
Prohibited action	(typical)	Indicates a dangerous action. Hence, **you must not!**
Mandatory action	(typical)	Indicates a mandatory action. Hence, **you must!**

Type	Symbol	Meaning
Requirement, Note, Remark		Indicates an activity you must perform prior to continuing, or gives information on a particular point that must be observed.
Best practice		Indicates an advice or recommendation on the easiest and best way to further proceed.
Material Damage		Indicates information particular to possible damage of the equipment.

Table 1-2 Symbols and signs

1.1.5 Trademarks and brand names

For easier legibility, registered brand names are listed below and will not be further tagged with their respective trademark. It must be understood that the brands (the list below is not necessarily concluding) are protected by copyright and/or other intellectual property rights even if their legal trademarks are omitted in the later course of this document.

Brand Name	Trademark Owner
DELO-ML®	© DELO Industrie Klebstoffe GmbH & Co. KGaA, DE-Windach
EPO-TEK®	© Epoxy Technology, Inc., USA-Billerica, MA
Loctite®	© Henkel AG & Co. KGaA, DE-Düsseldorf
NORD-LOCK®	© Nord-Lock International AB, SE-Malmö
omniFIT®	© Henkel AG & Co. KGaA, DE-Düsseldorf
Pico-Clasp	© Molex, USA-Lisle, IL

Table 1-3 Brand names and trademark owners

1.1.6 Copyright

© 2025 maxon. All rights reserved. Any use, in particular reproduction, editing, translation, and copying, without prior written approval is not permitted (contact: maxon international ltd., Brünigstrasse 220, CH-6072 Sachseln, +41 41 666 15 00, www.maxongroup.com). Infringements will be prosecuted under civil and criminal law. The mentioned trademarks belong to their respective owners and are protected under trademark laws. Subject to change without prior notice.

mmag | «EC frameless DT» Installation Manual | Edition 2025-03 | DocID rel12808

1.2 About the device

The direct drive «EC frameless DT» is a high-performance, high-torque, dynamic brushless DC internal rotor motor (BLDC motor). It is available in various sizes and is designed to be incorporated into a specially adapted outer body that serves both as the motor's supporting structure and as torque-carrying device.

The «EC frameless DT» composes two main parts:

- **Stator with electric connections**; for installation into a customer-provided outer body (such as housing, machine structure, or carrier system)
- **Magnetic rotor**; for on-site assembly with the installed stator and the customer-provided torque-carrying device

Outer body, motor shaft, and bearings are not part of the «EC frameless DT»'s scope of delivery and are being designed for a particular case of application by the customer.

Important note on the design
The «EC frameless DT» is a sensorless motor and does not feature any Hall sensor signals. As an option, maxon offers the «TSX MAG» encoder.

1.3 About the safety precautions

Safety first—always!

BY PRINCIPLE, THE «EC FRAMELESS DT» COMPRISES PARTS THAT PRODUCE STRONG MAGNETIC FIELDS. IT IS THEREFORE MOST IMPORTANT THAT YOU ARE AWARE OF THE CONSEQUENCES OF THESE MAGNETIC FORCES, THAT YOU TAKE THE APPROPRIATE PRECAUTIONARY MEASURES, AND THAT YOU COMMUNICATE THIS FACT TO PERSONS IN YOUR VICINITY!

READ THE FOLLOWING INSTRUCTIONS CAREFULLY BEFORE YOU ENGAGE WITH ANY WORK AND FOLLOW THE INSTRUCTIONS GIVEN AT ALL TIMES!

- Make sure that you have read and understood the note “READ THIS FIRST” auf Seite A-2!
- Do not engage with any work unless you possess the stated skills (➔Kapitel “1.1.2 Target audience” auf Seite 1-5)!
- Consult ➔Kapitel “1.1.4 Symbols & signs” auf Seite 1-5 to understand the subsequently used indicators!
- You must observe any regulation applicable in the country and/or at the site of implementation with regard to health and safety/accident prevention and/or environmental protection!

DANGER

High voltage and/or electrical shock
Touching live wires causes death or serious injuries!
- *Consider any power cable as connected to live power, unless you have proven the opposite!*
- *Make sure that neither end of cable is connected to live power!*
- *Make sure that the power source cannot be engaged while work is in process!*
- *Obey lock-out/tag-out procedures!*
- *Make sure to securely lock any power engaging equipment against unintentional engagement and tag it with your name!*

WARNING

Strong magnetic field
High magnetic force can cause serious injuries!
- *Keep stator and rotor mechanically blocked at all times! Do so by using a mechanical locking device, a mounting aid, or non-magnetic spacers!*
- *Make sure to remove/keep clear any metal parts or metallic items—also such as cardiac pacemakers, implants, watches, bracelets, credit cards, mobile phones, etc—before you approach the motor!*
- *Use only non-magnetic tools when you work on the motor or in its vicinity!*
- *Put up warning signs stating STRONG MAGNETIC FIELDS around the installation area and at the storage location!*
- *Inform persons around of the potential danger. Instruct them accordingly and request them to follow the precautionary measures!*

WARNING

Pinching and shearing risk
Sudden movement and shift of the rotor can cause serious injuries!
To prevent sudden shift during installation you must keep both stator and rotor blocked at all times. Do so by using a mechanical locking device, a mounting aid, or non-magnetic spacers!

Strong magnetic field
The high magnetic forces produced by the device constitute an imminent hazard to persons wearing a cardiac pacemaker or metal implants.
All persons who possibly may suffer impairment caused by strong magnetic fields must not approach the device and must stay clear and in a safe distance of at least two (2) meters.

General rules
- *Make sure that all associated devices and components are installed according to local regulations.*
- *Be aware that, by principle, an electronic apparatus cannot be considered fail-safe. Therefore, you must make sure that any machine/apparatus has been fitted with independent monitoring and safety equipment. If the machine/apparatus should break down, if it is operated incorrectly, if the control unit breaks down or if the cables break or get disconnected, etc., the complete drive system must return—and be kept—in a safe operating mode.*
- *Be aware that you are not entitled to perform any repair on components supplied by maxon motor.*

Electrostatic sensitive device (ESD)
- *Wear electrically conductive clothing and footwear.*
- *Observe ESD protective measures.*

2 SPECIFICATIONS

In its catalog data sheets maxon specifies the motor data with block commutation (according to «Standard Specification no. 101», which you can find in the maxon catalog in chapter “Technology short and to the point”. For detailed information and values consult the data sheets in the ➔Appendix as of page 27.

The motor data listed below refer to field-oriented control (FOC) and therefore differ from the catalog data based on block commutation. In connection with FOC maxon recommends using the «TSX MAG» encoder module, which can generate both incremental and commutation signals (Hall signals).

2.1 Technical Data

Parameter					DT38S	DT38M	DT50S	DT50M
Key data [a]	Nominal voltage [b]			VDC	21.6		43.2	
	Power rating			W	110	240	220	210
	Nominal speed			rpm	9450	4740	5200	3390
	Nominal torque [c]			mNm	104	197	341	458
	Nominal current			A	6.55	6.15	5.63	4.9
	Continuous torque with heat sink			mNm	130	220	380	550
	Motor constant [d]			$\frac{mNm}{\sqrt{W}}$	36.9	61.9	93.3	126
	Peak torque 70% lin dev			mNm	360	808	1400	2120
	Current for peak torque 70% lin dev			A	28.2	31.9	29.1	28.8
	Peak torque 1s			mNm	457	960	1590	2410
	Peak current 1s			A	45.3	44.2	40.9	40
	Winding NTC @ 25 °C			K	5 kΩ ±1%, beta (25…85 °C): 3490			
Inputs and Outputs (optional) [e]	Incremental and commutation signals				Hall signal (generated): H1, H2, H3 2-channel incremental encoder with own NTC			
Dimensions	Weight	Rotor		g	12	20	28	40
		Stator	Mounting flange	g	54	65	95	107
			Cables	g	7	7	7	7
			Other	g	52	77	88	116
			Total	g	113	149	190	230
		Overall weight		g	125	169	218	270
		Overall weight for integration [f]		g	64	97	116	156
	Ø outside (ØR1)			mm	55		72	
	Ø stator lamination			mm	38		50	
	Ø inside (ØS2)			mm	17		28	
	Length (LM)			mm	19	25	22	27
Environment	Ambient temperature			°C	−40…+100			
	Humidity			%	5…90 (condensation not permitted)			

Parameter					DT65S	DT65M	DT85M	DT85L
Key data [a]	Nominal voltage [b]			VDC	43.2			
	Power rating			W	290	375	570	680
	Nominal speed			rpm	3570	2010	2680	1500
	Nominal torque [c]			mNm	734	1200	1800	2980
	Nominal current			A	8.32	7.64	15.3	14.1
	Continuous torque with heat sink			mNm	910	1400	2110	3420
	Motor constant [d]			$\frac{mNm}{\sqrt{W}}$	181	270	353	533
	Peak torque 70% lin dev			mNm	2630	3610	5370	9630
	Current for peak torque 70% lin dev			A	37.8	29.3	57.4	57.8
	Peak torque 1s			mNm	3530	5390	9580	17‘200
	Peak current 1s			A	82.9	81.3	180	180
	Winding NTC @ 25 °C			K	5 kΩ ±1%, beta (25…85 °C): 3490			
Inputs and Outputs (optional) [e]	Incremental and commutation signals				Hall signal (generated): H1, H2, H3 2-channel incremental encoder with own NTC			
Dimensions	Weight	Rotor		g	44	71	98	153
		Stator	Mounting flange	g	151	185	215	266
			Cables	g	7	7	9	9
			Other	g	175	261	421	614
			Total	g	333	453	643	887
		Overall weight		g	377	524	741	1040
		Overall weight for integration [f]		g	219	332	517	765
	Ø outside (ØR1)			mm	88		108	
	Ø stator lamination			mm	65		85	
	Ø inside (ØS2)			mm	35.5		47	
	Length (LM)			mm	25	33	33	43
Environment	Ambient temperature			°C	−40…+100			
	Humidity			%	5…90 (condensation not permitted)			

[a] The values refer to field-oriented control (FOC).

[b] The nominal voltage is based on the assumptive supply voltage of 24 or 48 VDC for a positioning controller with a maximum output voltage of 90% of the supply voltage (0.9 x V_{CC}).

[c] If the stator is mounted in a metallic, thermally conductive housing, heat transfer is usually improved (typically by 50%) and operation with higher nominal torques is possible.

[d] The motor constant indicates the electrodynamic torque (without friction, etc.), which occurs with current heat losses of 1 W. It is an important parameter for the strength of a motor.

[e] Choice between multiple functions.

[f] For a compact design, maxon can integrate the motor into your housing. The weight does not include cables or the mounting flange.

Table 2-4 Technical data (typical)

2.2 Dimensional Drawings

For dimensional drawings see ➔Appendix as of page 27.

2.3 Nameplate

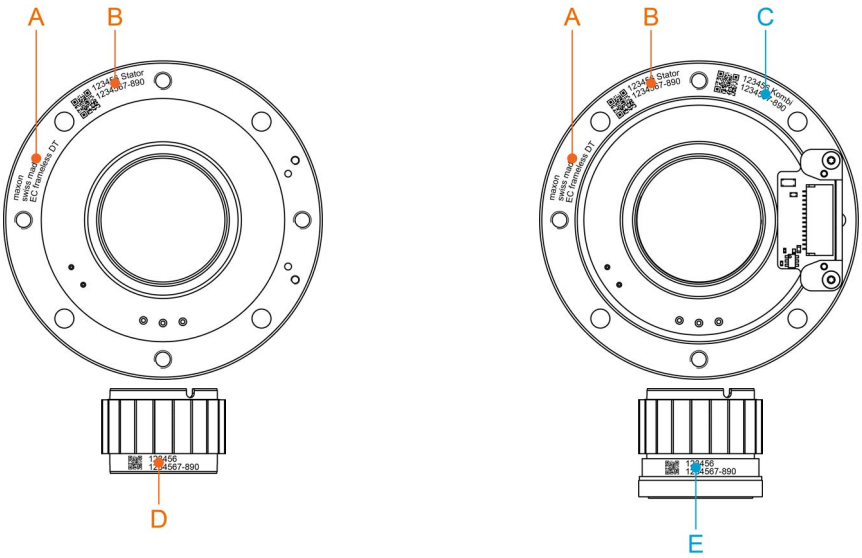

Figure 2-1 Nameplate (typical) – EC frameless DT without (left) and with TSX MAG encoder (right)

Part	A	B	C
Stator	Manufacturer Origin Type	Data Matrix Code Production data Production ID and consec. #	Data Matrix Code Production data Production ID and consec. #

Part	D
Rotor	Data Matrix Code Production data Production ID and consec. #

Part	E
Rotor with pilot rotor	Data Matrix Code Production data Production ID and consec. #

Table 2-5 Labeling details

2.4 Standards

The described device has been successfully tested for compliance with the below listed standards.

Standards & Specifications		
Manufacturing	101	Standard Specification for maxon EC motor

Table 2-6 Standards

••page intentionally left blank••

3 INSTALLATION

The motor's two main components—stator with electric connections and magnetic rotor—come in unmounted condition in packaged cases.

Precautions with multiple packaging
Depending on the order volume, several rotors are supplied in the same packaging.
When removing a rotor, you must ensure that the rotors remaining in the packaging are and remain fixed. Otherwise, they may attract each other magnetically and thus be damaged.

Motor versions with encoder (with optional «TSX MAG») have an additional pilot rotor equipped to the rotor and the stator carries a built-in encoder module. The four components are paired with each other during the manufacturing process and thus form a final unit. It is therefore important that you handle and install the rotor and stator paired.
For motor versions without encoder, rotor and stator are not paired.

Important note on the design
*The components for motor versions **with encoder** are matched and paired with each other. Install them in the paired state.*

BESIDES SPECIAL PRECAUTIONS IN RESPECT TO HEALTH AND SAFETY, THE «EC FRAMELESS DT» MUST BE INSTALLED IN A PARTICULAR AND SPECIFIC WAY. FOR BOTH SAFE AND EASY INSTALLATION AS WELL AS RELIABLE OPERATION CLOSELY FOLLOW THE BELOW DESCRIBED INFORMATION IN GIVEN ORDER.

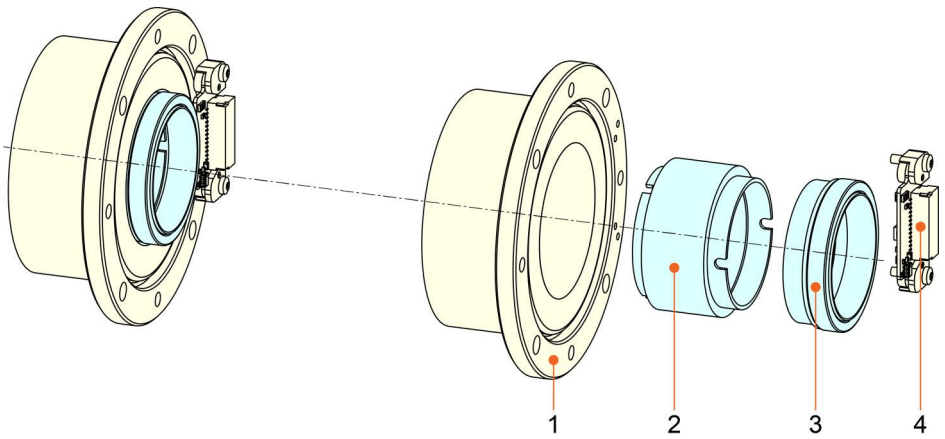

1 Stator
2 Rotor
3 Pilot rotor (only in connection with TSX MAG)
4 TSX MAG encoder (optional)

Figure 3-2 Main components

3.1 General Rules

Check on the safety matters and rules (➔page 7) before you proceed.

BY PRINCIPLE, THE «EC FRAMELESS DT» COMPRISES PARTS THAT PRODUCE STRONG MAGNETIC FIELDS. IT IS THEREFORE MOST IMPORTANT THAT YOU ARE AWARE OF THE CONSEQUENCES OF THESE MAGNETIC FORCES, THAT YOU TAKE THE APPROPRIATE PRECAUTIONARY MEASURES, AND THAT YOU COMMUNICATE THIS FACT TO PERSONS IN YOUR VICINITY!

BEFORE YOU ENGAGE WITH ANY WORK, READ, UNDERSTAND, AND FOLLOW THE SAFETY PRECAUTIONS AS OF PAGE 7!

OBSERVE THE FOLLOWING NOTICE ON THE PREREQUISITES FOR PERMISSION TO COMMENCE INSTALLATION.

The «EC frameless DT» is considered as partly completed machinery according to EU Directive 2006/42/EC, Article 2, Clause (g) and **is intended to be incorporated into or assembled with other machinery or other partly completed machinery or equipment**.

WARNING

Risk of injury
Operating the device without the full compliance of the surrounding system with the EU Directive 2006/42/EC may cause serious injuries!

- *Do not operate the device, unless you have made completely sure that the other machinery fully complies with the EU directive's requirements!*
- *Do not operate the device, unless the other machinery fulfills all relevant health and safety aspects!*
- *Do not operate the device, unless all respective interfaces have been established and fulfill the requirements stated in this document!*

WARNING

Pinching and shearing risk
Sudden movement and shift of the rotor can cause serious injuries!
To prevent sudden shift during installation you must keep stator and rotor blocked at all times. Do so by using a mechanical locking device, a mounting aid, or non-magnetic spacers!

Electrostatic Sensitive Devices (ESD)

- *Wear electrically conductive clothing and footwear.*
- *Observe ESD protective measures.*

Requirements for operation
The function of the drive is only guaranteed if all specified design characteristics and tolerances are met. Do only continue if this is actually the case. If this is not the case you must rectify the deviations, first.
Safe, trouble-free, long-term operation is only possible…

- *if the defined properties of the outer body (such as housing, machine structure, or carrier system) as well as the motor shaft and its bearings are met, and*
- *if centering and axial position of stator and rotor are carried out with sufficient accuracy!*

Possible irreversible damage of motor
Until completion of the installation, individual components can be permanently damaged by improper handling.

- *Handle the components with particular care.*
- *Pay special attention to cleanliness.*
- *Make sure that no impurities, foreign objects, or particles penetrate the drive or can be attracted by the motor magnets.*

Thermal behavior
The values given in the data sheet for nominal torque (maximal continuous torque), thermal resistances, and nominal current (maximal continuous current) refer to the motor mounted to a plastic plate with limited heat dissipation capability and free convection.
When mounted to a metal flange, the thermal resistance R_{th2} can be reduced by up to 80%. Thus, technical measures (such as good ventilation, heat-conducting metallic mounts, or heat sinks) can substantially reduce temperatures and significantly increase performance.

3.2 Design Guidelines

Important note on the design
The correct technical design of the bearing arrangement and the integration into the application's housing are the sole responsibility of the customer.
- *maxon does not make any suggestions as to how a customer-side integration into the respective application must be designed and laid out or what it should look like.*
- *The points listed below are intended to serve as an aid and to show (in a non-exhaustive manner) which drive-side aspects need to be taken into account in a customer-built design.*
- *The points listed below do not claim to be complete.*

3.2.1 Geometric Tolerances

The dimensional drawings (see ➔Appendix as of page 27) show the shape and position tolerances of stator to rotor. Other tolerances may apply to specific motor designs, which will be communicated by appropriate means.

Compliance with the designated tolerances is vital and guarantees that the motor achieves the specified performance data (such as torque and speed). Even minor deviations from the specified form and position tolerances will result in a reduction of the performance data. Exceeding deviations can lead to stripping of the rotor, to an increased cogging torque, and to permanent damage to the motor.

maxon therefore urgently recommends that the specified form and position tolerances indicated in the dimensional drawings be observed.

3.2.2 Mechanical Design

The customer's components (for example housing and shaft) must be designed for the expected mechanical loads and forces in terms of strength, rigidity, and stability.

3.2.3 Magnetic Forces

The rotor of the «EC frameless DT» is equipped with strong magnets. As a result, large forces can occur in both the axial and radial directions. Note this in particular with regard to the following topics:

- Bearing arrangement
- Calculations for strength and stiffness
- Joining the individual components during assembly
- Maintenance
- Dismantling and deconstruction

With rotor and stator arranged in accordance to the specifications on the dimensional drawings (see ➔Seite 2-11), then the axial and radial forces emanating from the magnetic field are minimal.

3.2.4 Heat Dissipation

The stator of the «EC frameless DT» must be thermally well connected to the customer's housing. This can be achieved by the design and material selection of the housing and via suitable fit tolerances.

3.2.5 Bearing and Fixation of the Rotor

maxon recommends the use of ball bearings with an ISO tolerance class P5 or higher.

maxon recommends to join the rotor of the «EC frameless DT» and the customer's counterpart (shaft) by adhesive bonding. It is important to ensure that the bonded joint is designed that the maximum motor torque can be transmitted with a sufficient safety margin over the entire operating range.

Possible irreversible damage of motor
The rotor is not designed to produce a force-fit torque transmission to the customer shaft by means of a press fit (interference fit, shrink fit).
maxon explicitly advises against a press fit.

The following data are to be understood as recommendations. They apply to common models and methods under typical conditions and do not claim to be complete or correct. For manufacturers and sources of supply see ➔page 6.

Drive	Shaft material	Adhesive	Shaft tolerance	Surface finish
EC frameless DT38S	Steel	Ergo 4430 DELO-ML 5327	17 f7	≤ R_a 1.6
EC frameless DT38M				
EC frameless DT50S	Steel	Ergo 4430 DELO-ML 5327	28 f7	≤ R_a 1.6
EC frameless DT50M				
EC frameless DT65S	Steel	Ergo 4430 DELO-ML 5327	35.5 f7	≤ R_a 1.6
EC frameless DT65M				
EC frameless DT85M	Steel	Ergo 4430 DELO-ML 5327	47 f7	≤ R_a 1.6
EC frameless DT85L				

Table 3-7 Fixation of the rotor – recommended adhesives

3.2.6 Fixation of the Stator

maxon recommends to fix the stator of the «EC frameless DT» axially using bolted connections. This axial screw connection also serves as a non-positive transmission of the torque.

Requirements for operation
Use only screws that, once installed, do not protrude the inside front face of the stator flange. Too long screws can damage the printed circuit board, thus possibly causing electrical breakdown and destruction of the motor.

The following data are to be understood as recommendations. They provide an overview of the recommended fastening screws and the minimum tightening torques for safe torque transmission. An application-specific screw calculation as to VDI guideline 2230 must be taken into account.

The screw connections must be tightened to the appropriate torque using a torque wrench.

Drive	Screws	Property class	Tightening torque
EC frameless DT38S	3 x M3	min A2-80 / 6.8	1 Nm ±0.2
EC frameless DT38M			
EC frameless DT50S	4 x M4	min A2-80 / 6.8	2.5 Nm ±0.5
EC frameless DT50M			
EC frameless DT65S	4 x M4	min A2-80 / 6.8	2.5 Nm ±0.5
EC frameless DT65M			
EC frameless DT85M	4 x M4	min A2-80 / 6.8	2.5 Nm ±0.5
EC frameless DT85L			

Table 3-8 Fixation of the stator – recommended bolted joints

The screw connections must locked and secured using threadlocker or Nord-Lock safety washers. For manufacturers and sources of supply see ➔page 6.

Material pair or Combination of parts	Product	Remark
Steel screw / **Aluminum** casing **Steel** screw / **Steel** casing	DELO-ML 5327	[g]
	EPO-TEK 301-2G	[g]
	Loctite 222	[f]
	Nord-Lock	[f]
	omniFIT 230L	[f]

[f] detachable connection [g] inseparable, rigid connection

Table 3-9 Fixation of the stator – recommended screw locks

3.2.7 Tools & Equipment

- Hand tools, non-magnetic
- Cleaning agent
- Lint-free cloths
- Centering aids for rotor and stator, non-magnetic
- Mounting fixture (for example hand-lever press or drill stand)

3.3 Mechanical Installation

Recommended procedure
The installation approach that matches your case of application depends on your setup, your actual application design, and your specific mounting conditions.
Observe the recommendations and analogously adjust the procedure as to your case of application.

WARNING

Pinching and shearing risk
Sudden movement and shift of the rotor can cause serious injuries!
To prevent sudden shift during installation you must keep stator and rotor blocked at all times. Do so by using a mechanical locking device, a mounting aid, or non-magnetic spacers!

Protect hands and fingers
Put on well-fitting, cut-resistant protective gloves.

Two variants of mounting options are schematically shown below, which must be understood as a general guide. The actual conditions depend on the respective customer application.

For easier differentiation, color coding is used in illustrations of individual components are shown:

Yellow	Stator of the «EC frameless DT»	Light yellow	Housing (by customer)
Blue	Rotor of the «EC frameless DT»	Light blue	Shaft (by customer)

1) Fasten rotor on shaft

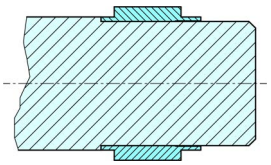

Figure 3-3 Mounting the rotor

2) Position and align the shaft with the housing. Support the shaft.

Figure 3-4 Positioning shaft and housing

3) Mount and fasten stator in a guided and controlled position.

Figure 3-5 Mounting the stator

4) Check installation position of rotor and stator as to dimensional drawing's specifications (➔as of page 27).

Figure 3-6 Checking the installation position

3.4 Electrical Installation

Electrical Interface—possible permanent damage

- *Handle connections and cables with special care!*
- *Do not kink cable, do not bend around small radii, do not route around sharp edges!*
- *Do not apply tensile stress, use strain relief!*

3.4.1 Connections

3.4.1.1 Motor

By default, the «EC frameless DT» is supplied without connector. It has three individual strands to connect to the motor windings 1, 2, and 3 as well as two additional individual strands for the NTC thermistor.

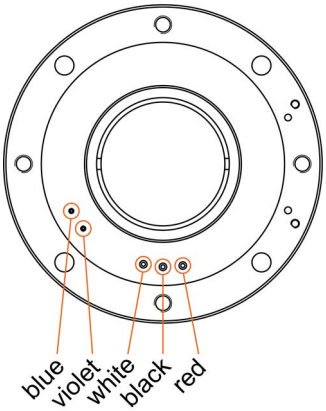

Figure 3-7 Motor connections

Color	Signal	Description
red [h]	W1	Motor winding 1
black [h]	W2	Motor winding 2
white [h]	W3	Motor winding 3
violet [i]	NTC_IN	Thermistor
blue [i]	NTC_OUT	Thermistor

[h] AWG24 for DT38, AWG18 for DT50 & DT65 and AWG16 for DT85

[i] AWG18 for all sizes

Table 3-10 Terminal assignment – Motor strands

3.4.2 Temperature Monitoring

3.4.2.1 Motor: Temperature Sensor

The «EC frameless DT» is equipped with two in parallel connected temperature sensors based on the NTC thermistor principle (NTC; Negative Temperature Coefficient). The data sheet (➔as of page 27) shows the equivalent resistance of this parallel circuit. Thereby, a negative temperature coefficient is used, which is associated with a decreasing electrical resistance as the temperature increases.

The NTC thermistor are each positioned between two motor windings. The direct coupling to the winding results in a delay-free and very accurate temperature measurement. This leads to a minimal delay of the temperature measurement and to a higher thermal resistance (lower measured temperature). For this reason, temperature monitoring is primarily suitable for continuous operation, whereby the actual temperature measurement depends on the mounting conditions and requires testing.

The NTC thermistor does not perform linear. The respective temperature can be calculated using the following parameters (find the corresponding values in the data sheet; ➔Appendix as of page 27):

Motionless, permanently energized motor
If the rotor does not turn while the same winding is permanently energized, no uniform heating takes place in the motor. In this case, the formula can only serve as an approximation.

$$T(R) = \frac{1}{\frac{\ln\left(\frac{R}{R_{25}}\right)}{beta} + \frac{1}{T_{25}}}[K]$$

$$T_{25} = 298.15[K]$$

$beta$	Constant (temperature coefficient) optimized for the operating range of the motor
R_{25}	Nominal resistance at standard temperature T_{25}
T_{25}	Standard temperature of 25 °C (298.15 K)

4 MAINTENANCE

4.1 Periodic Inspection

The «EC frameless DT» as a whole and its individual parts are maintenance-free.

Outer body, motor shaft, and bearings are customer-made parts. For their maintenance and repair consult the relevant instructions. Thereby observe the following:

If you perform maintenance on outer body, motor shaft, and bearings:

- Before you start: Be aware of the necessary safety precautions (➔page 7) and strictly follow the general rules (➔page 14).
- Verify the correct position of the motor before re-commissioning.

4.2 Storage

Observe all safety aspects (➔“About the safety precautions” auf Seite 1-7) and the stated environmental conditions (➔“Technical Data” auf Seite 2-9).

Physically separate the storage location to prevent all persons who possibly may suffer impairment caused by strong magnetic fields from approaching the device and force them to stay clear in a safe distance of at least two (2) meters. Put up warning signs stating STRONG MAGNETIC FIELDS.

4.3 Decommissioning & Dismantling

Dismantling follows basically the Installation in reverse order (➔Kapitel “3.2 Design Guidelines” auf Seite 3-15). Be aware of the necessary safety precautions (➔page 7) and strictly follow the general rules (➔page 14).

4.4 Disposal

In no case dispose used components with normal domestic waste.

Dispose used components only via official collection sites or a certified recycling company. Draw to attention that the high magnetic forces produced by the device constitute an imminent hazard to persons wearing a cardiac pacemaker or metal implants.

••page intentionally left blank••

DECLARATION OF INCORPORATION

Declaration of Incorporation of partly completed Machinery according to EU Directive 2006/42/EC, Annex II 1B.

Manufacturer	maxon motor ag Brünigstrasse 220 CH-6072 Sachseln Switzerland	
Authorized representative to compile the relevant technical documentation	maxon motor ag Brünigstrasse 220 CH-6072 Sachseln Switzerland	
Product	EC frameless DT	Direct current electric motor, comprising stator, rotor, and connector cables

The manufacturer declares that the aforementioned product is considered partly completed machinery complying with all essential requirements of EC Directive 2006/42/EC (Directive on Machinery). It is intended, exclusively, to be incorporated into machinery or partly completed machinery and therefore does not yet meet all requirements of the Directive on Machinery.

Applied harmonized standards: EN ISO 12100:2010

The special technical documentation according to Annex VII, Part B has been prepared and will be made available to the national authorities at their request.

The product must not be put into service until the machinery into which the aforementioned product is to be incorporated has been declared in conformity with the provisions of the Directive on Machinery.

Sachseln, December 17, 2021, on behalf of the manufacturer

Daniel von Wyl
Managing Director maxon motor ag

Dominik Stockmann
Director R&D Motors & Encod

LIST OF FIGURES

Figure 2-1 Nameplate (typical) – EC frameless DT without (left) and with TSX MAG encoder (right) 11
Figure 3-2 Main components 13
Figure 3-3 Mounting the rotor 18
Figure 3-4 Positioning shaft and housing 18
Figure 3-5 Mounting the stator 18
Figure 3-6 Checking the installation position 18
Figure 3-7 Motor connections 19

LIST OF TABLES

Table 1-1 Notation used 5
Table 1-2 Symbols and signs 6
Table 1-3 Brand names and trademark owners 6
Table 2-4 Technical data (typical) 10
Table 2-5 Labeling details 11
Table 2-6 Standards 11
Table 3-7 Fixation of the rotor – recommended adhesives 16
Table 3-8 Fixation of the stator – recommended bolted joints. 16
Table 3-9 Fixation of the stator – recommended screw locks 17
Table 3-10 Terminal assignment – Motor strands 19

INDEX

A
alerts *5*
applicable EU directive *14*
applicable regulations *7*
B
BLDC motor *6*
C
color coding in illustrations *17*
country-specific regulations *7*
D
declaration of incorporation *23*
delivery scope *6*
dismantling *21*
disposal *21*
E
environmental conditions *9*, *10*
ESD protection *8*
EU directive, applicable *14*
G
geometric tolerances *15*
H
how to
    interpret icons (and signs) used in this document *5*
I
increased drive power *15*
informatory signs *6*
inspection (periodic) *21*
L
labeling *11*
long-term storage *21*
M
mandatory action signs *5*
markings *11*
motor connections *19*
N
nameplate *11*
notations used *5*
NTC thermistor *20*
P
performance data *9*
performance increase *15*
precautions *7*
prerequisites prior installation *14*
prohibitive signs *5*
purpose
    of the device *6*
    of the document *5*
R
regulations, applicable *7*
S
safety alerts *5*
scope of delivery *6*
signs used *5*
standards, fulfilled *11*
Storage *21*
storage conditions *9*, *10*
symbols used *5*
T
technical data *9*
temperature monitoring
    motor *20*
terminal assignment *19*
thermal behavior *15*
thermistor *20*
tolerances *15*

APPENDIX

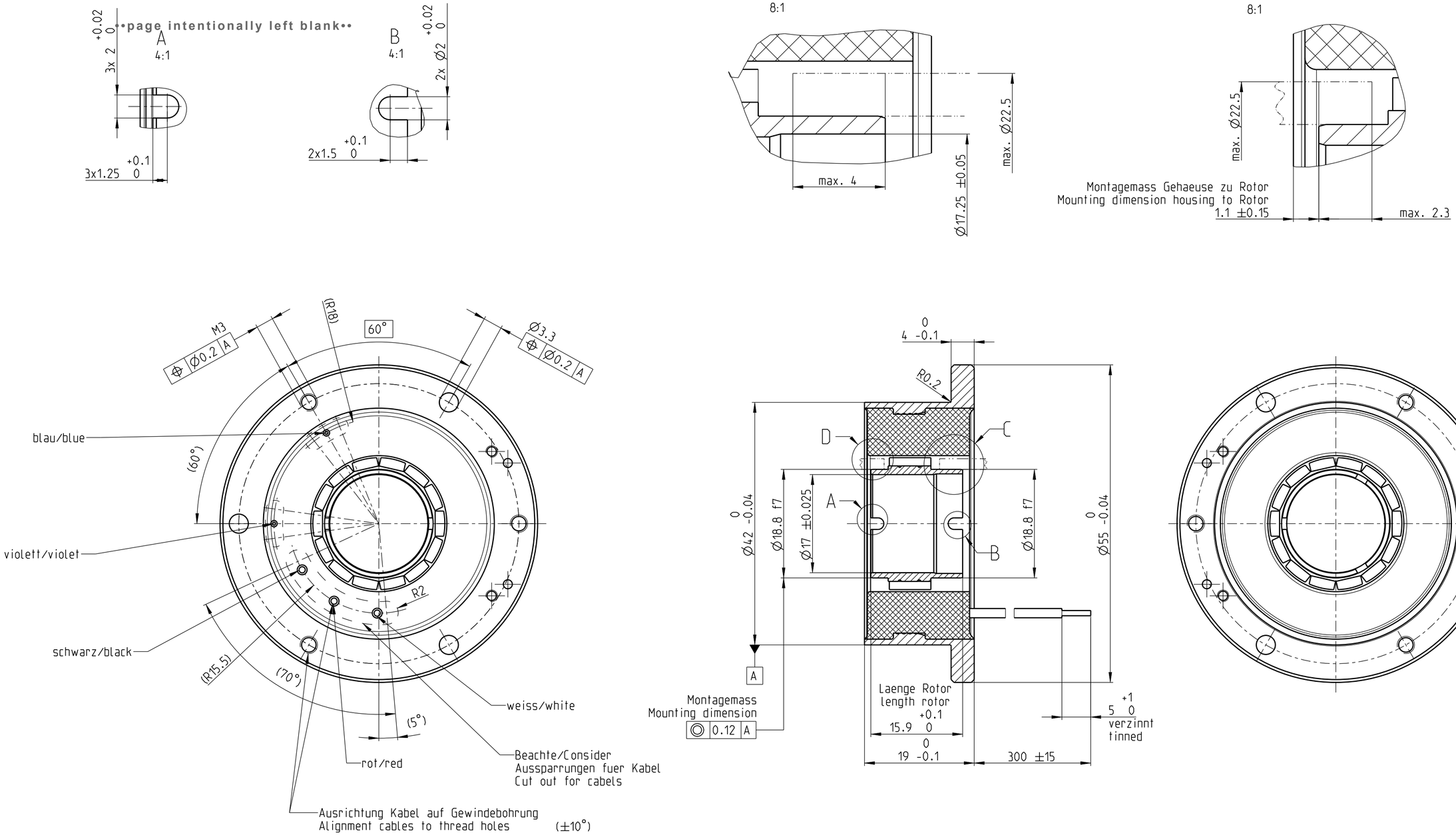

1:1

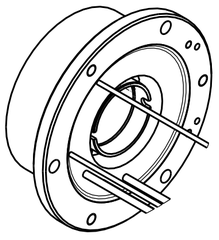

Kabelbelegung/wiring diagram		
AWG18	Kabel rot cable red	= Wicklung 1 = winding 1
AWG18	Kabel schwarz cable black	= Wicklung 2 = winding 2
AWG18	Kabel weiss cable white	= Wicklung 3 = winding 3
AWG24	Kabel violett cable violet	= Wicklung 4 = winding 4
AWG24	Kabel blau cable blue	= Wicklung 5 = winding 5

Rotor und Stator werden getrennt angeliefert
Rotor and Stator delivered seperated

PART NUMBER	EC frameless DT38S (FINISHED PRODUCT)					BASIC NUMBER	
TOLERANCING	GENERAL TOLERANCES	SCREW THREAD TOLERANCES	GEOMETRICAL TOLERANCES	SURFACES	EDGES	N/A N/A	
ISO 8015	ISO 2768:1989-m	ISO 965-1	N/A	ISO 1302:2002	N/A	N/A	
DOCUMENT TYPE	Dimensional Drawing	CO-NO: A100030968	DATE	NAME	SCALE	2:1	3D MODEL
TITLE		CREATED	06.12.2022	MMAGMUAG	SHEETS	A2/1/1	9757098
EC Frameless DT38S		MODIFIED	06.09.2023	MMAGMUAG	DIMENSION UNITS	PROJECTION METHOD	
		RELEASED	06.09.2023	MMAGSATH	mm	ISO 5456-1	
PART NUMBER	PART REVISION	DOCUMENT NUMBER					DOC REVISION
		9757281					05
maxon		www.maxongroup.com					

©2022 maxon. All rights reserved. Any use, in particular reproduction, selling, translation and copying without prior written approval is not permitted (contact: maxon international ltd., Brueningstrasse 220, CH-6072 Sachseln, +41 41 666 1500, www.maxongroup.com). Infringements will be prosecuted under civil and criminal law. The mentioned trademarks belong to their respective owner and are protected under trademark laws.

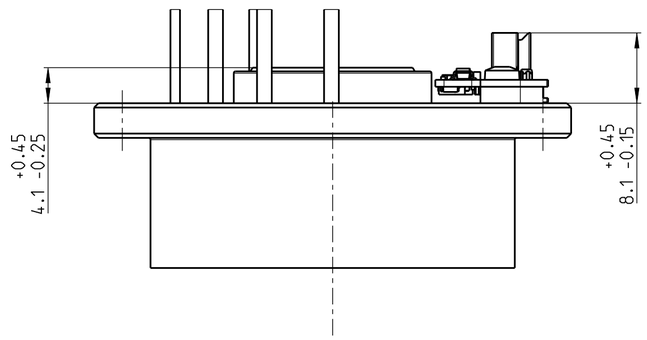

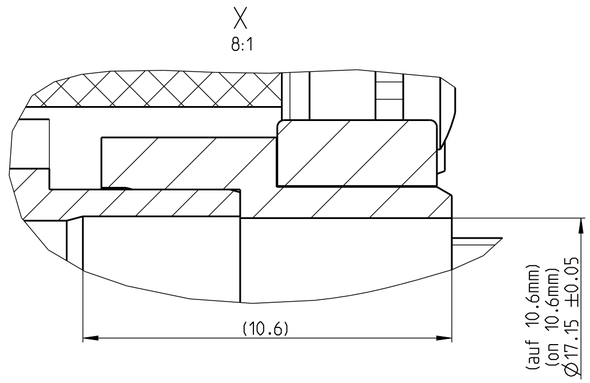

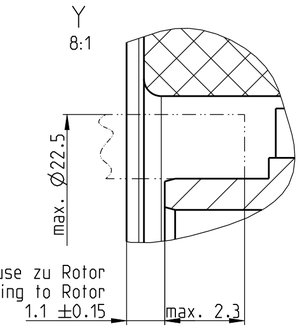

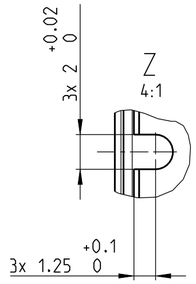

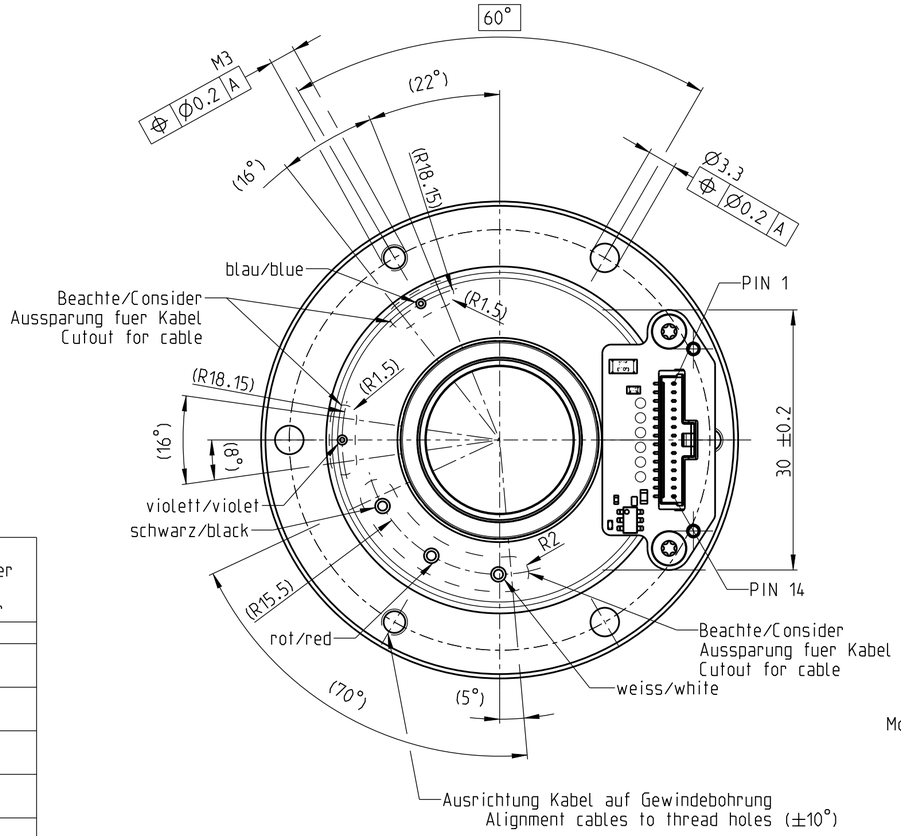

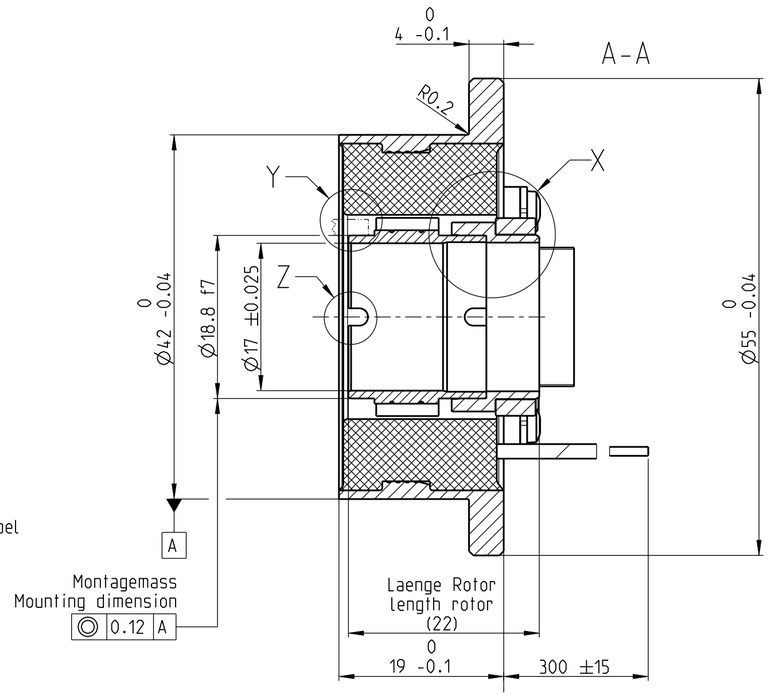

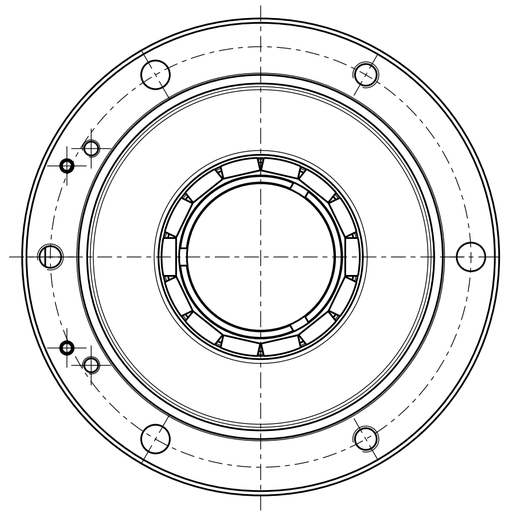

Steckerbelegung Kommutierung + Encoder PIN allocation Commutation + Encoder	
Pin	Signal
PIN 14	Vcc
PIN 13	GND
PIN 12	A/
PIN 11	A
PIN 10	B/
PIN 9	B
PIN 8	N.C.
PIN 7	N.C.
PIN 6	H1
PIN 5	H2
PIN 4	H3
PIN 3	N.C.
PIN 2	NTC+
PIN 1	NTC-

Kabelbelegung/wiring diagram		
AWG18	Kabel rot cable red	= Wicklung 1 = winding 1
AWG18	Kabel schwarz cable black	= Wicklung 2 = winding 2
AWG18	Kabel weiss cable white	= Wicklung 3 = winding 3
AWG24	Kabel violett cable violet	= NTC in
AWG24	Kabel blau cable blue	= NTC out

3:2

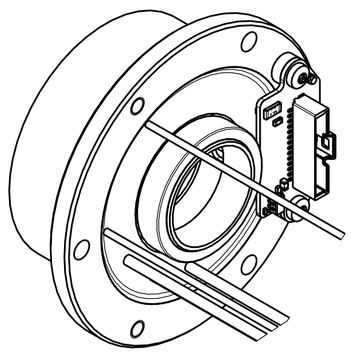

ACHTUNG / ATTENTION

Handhabungsvorschriften und Verpackungsmethoden beachten
observe precautions for handling and packing methods

Elektrostatisch gefaehrdete Bauelemente
electrostatic sensitive devices

Stator und Rotor werden getrennt verpackt und angeliefert.
Stator und Rotor muessen gepaart montiert werden.
Rotor and stator are separeted packed and delivered.
Stator and rotor must assembled paired

	maxon tacho ENC TSC MAG					
	maxon motor EC frameless DT38S					
PART NUMBER	FINISHED PRODUCT				BASIC NUMBER	
TOLERANCING: ISO 8015	GENERAL TOLERANCES: ISO 2768:1989-m	SCREW THREAD TOLERANCES: ISO 965-1	GEOMETRICAL TOLERANCES: ISO 1101	SURFACES: ISO 1302:2002	EDGES: N/A	N/A N/A N/A
DOCUMENT TYPE: Dimensional Drawing		CO-NO: A100031350	DATE	NAME	SCALE: 2:1	3D MODEL
TITLE		CREATED	04.04.2023	mmagsath	SHEETS: A2/1/1	9757098
EC frameless DT38S + TSX MAG (axial)		MODIFIED	17.11.2023	MMAGRENI	DIMENSION UNITS: mm	PROJECTION METHOD: ISO 5456-1
		RELEASED	17.11.2023	MMAGMUAG		
PART NUMBER	PART REVISION	DOCUMENT NUMBER: 10120239				DOC REVISION: 02
maxon		www.maxongroup.com				

©2022 maxon. All rights reserved. Any use, in particular reproduction, editing, translation and copying without prior written approval is not permitted (contact: maxon international ltd., Brueningstrasse 220, CH-6072 Sachseln, +41 41 666 1500, www.maxongroup.com). Infringements will be prosecuted under civil and criminal law. The mentioned trademarks belong to their respective owner and are protected under trademark laws.

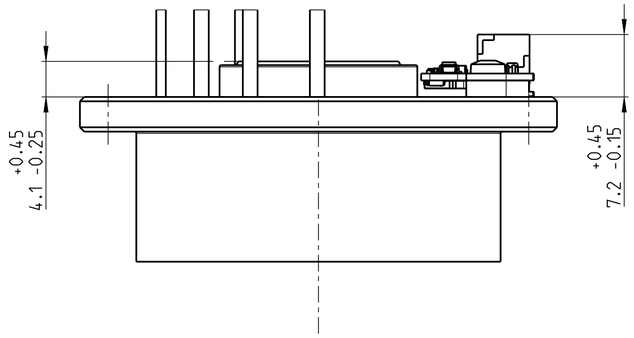

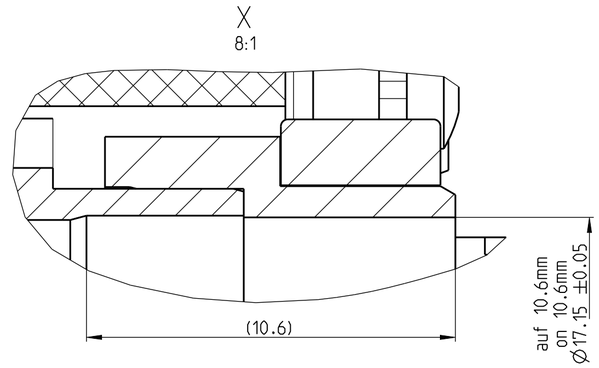

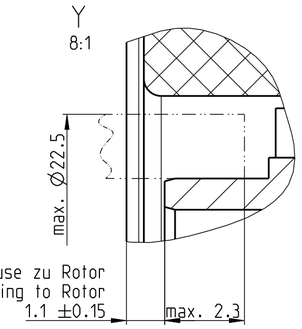

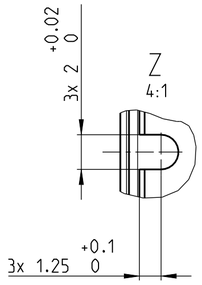

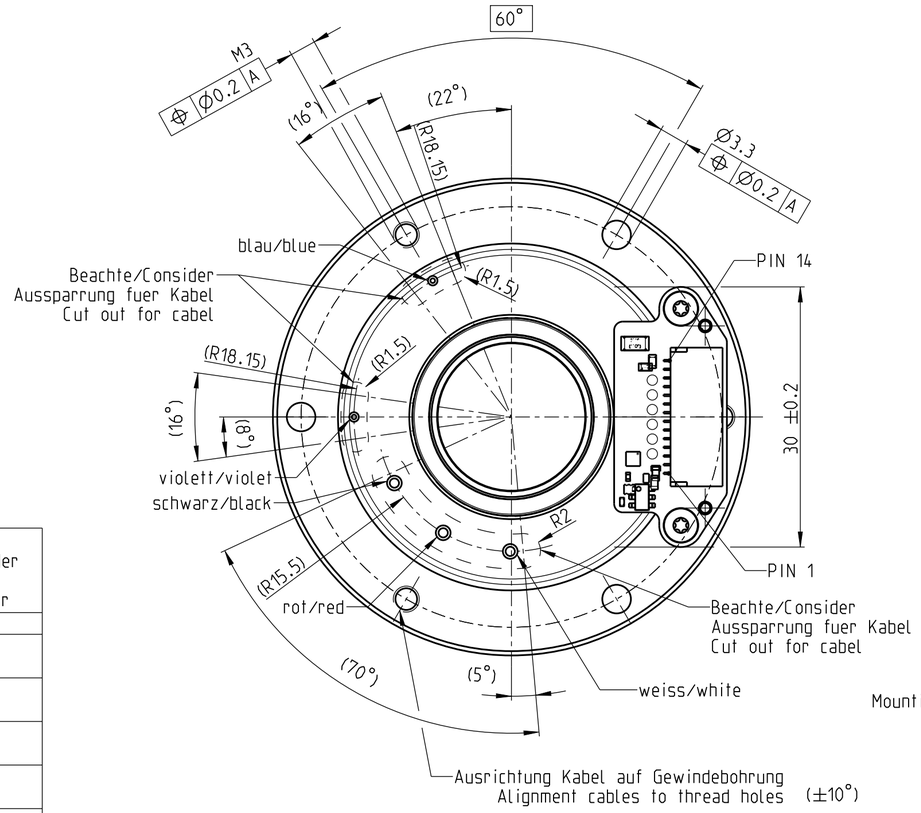

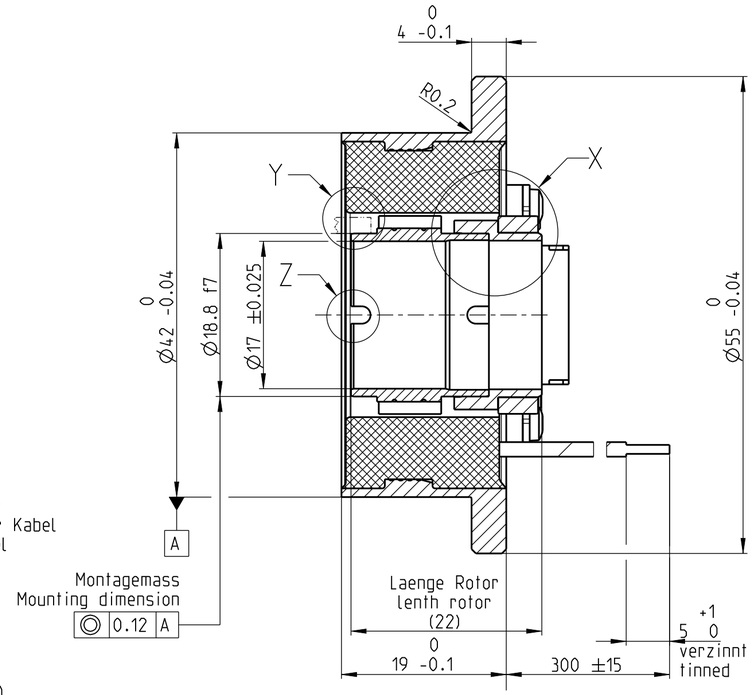

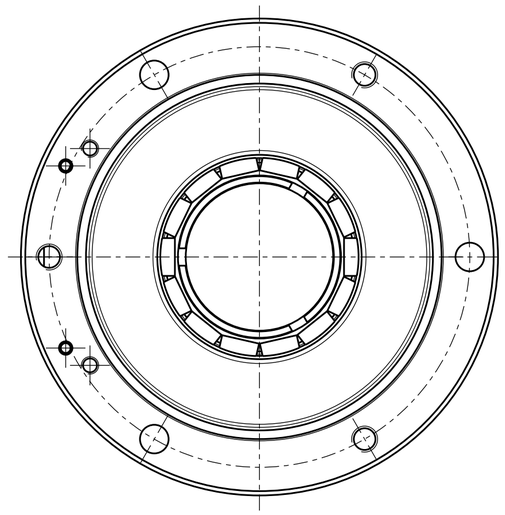

Steckerbelegung Kommutierung + Encoder PIN allocation Commutation + Encoder	
Pin	Signal
PIN 1	Vcc
PIN 2	GND
PIN 3	A/
PIN 4	A
PIN 5	B/
PIN 6	B
PIN 7	N.C.
PIN 8	N.C.
PIN 9	H1
PIN 10	H2
PIN 11	H3
PIN 12	N.C.
PIN 13	NTC+
PIN 14	NTC-

Kabelbelegung/wiring diagram		
AWG18	Kabel rot cable red	= Wicklung 1 = winding 1
AWG18	Kabel schwarz cable black	= Wicklung 2 = winding 2
AWG18	Kabel weiss cable white	= Wicklung 3 = winding 3
AWG24	Kabel violett cable violet	= NTC in
AWG24	Kabel blau cable blue	= NTC out

3:2

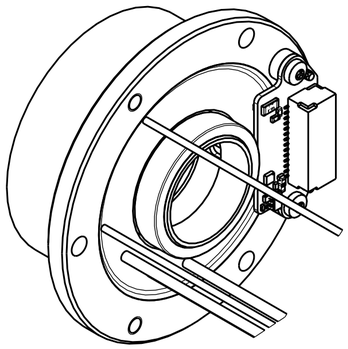

ACHTUNG / ATTENTION

Handhabungsvorschriften und Verpackungsmethoden beachten
observe precautions for handling and packing methods

Elektrostatisch gefaehrdete Bauelemente
electrostatic sensitive devices

Stator und Rotor werden getrennt verpackt und angeliefert.
Stator und Rotor muessen gepaart montiert werden.
Rotor and stator are separeted packed and delivered.
Stator and rotor must assembled paired

	maxon tacho ENC TSC MAG					
	maxon motor EC frameless DT38S					
PART NUMBER	FINISHED PRODUCT				BASIC NUMBER	
TOLERANCING: ISO 8015	GENERAL TOLERANCES: ISO 2768:1989-m	SCREW THREAD TOLERANCES: ISO 965-1	GEOMETRICAL TOLERANCES: ISO 1101	SURFACES: ISO 1302:2002	EDGES: N/A	N/A N/A: N/A
DOCUMENT TYPE: Dimensional Drawing		CO-NO: A100031350	DATE	NAME	SCALE: 2:1	3D MODEL
TITLE		CREATED	06.04.2023	mmagsalh	SHEETS: A2/1/1	9757098
EC frameless DT38S + TSX MAG (radial)		MODIFIED	17.11.2023	MMAGRENI	DIMENSION UNITS: mm	PROJECTION METHOD: ISO 5456-1
		RELEASED	17.11.2023	MMAGMUAG		
PART NUMBER	PART REVISION	DOCUMENT NUMBER: 10131094				DOC REVISION: 03
maxon		www.maxongroup.com				

©2022 maxon. All rights reserved. Any use, in particular reproduction, editing, translation and copying without prior written approval is not permitted (contact: maxon international ltd., Bruemigstrasse 220, CH-6072 Sachseln, +41 41 666 1500, www.maxongroup.com). Infringements will be prosecuted under civil and criminal law. The mentioned Trademarks belong to their respective owner and are protected under Trademark laws.

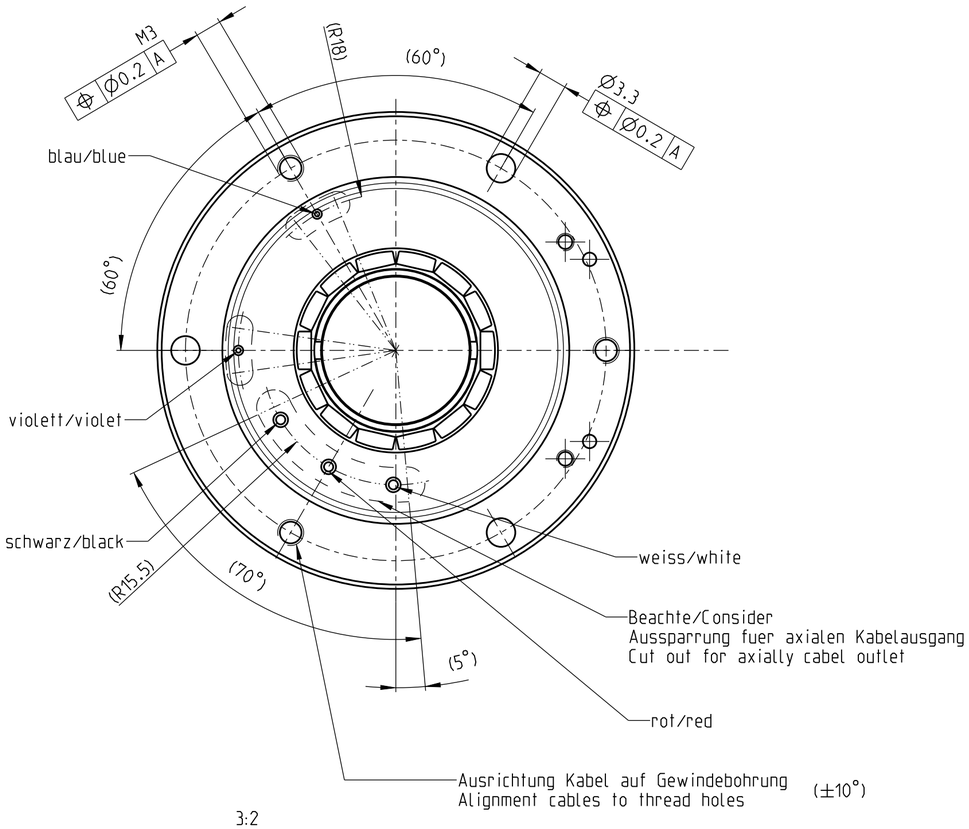

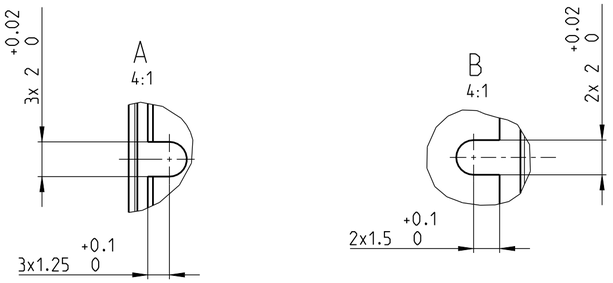

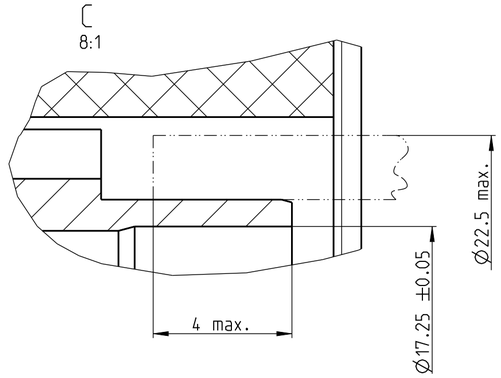

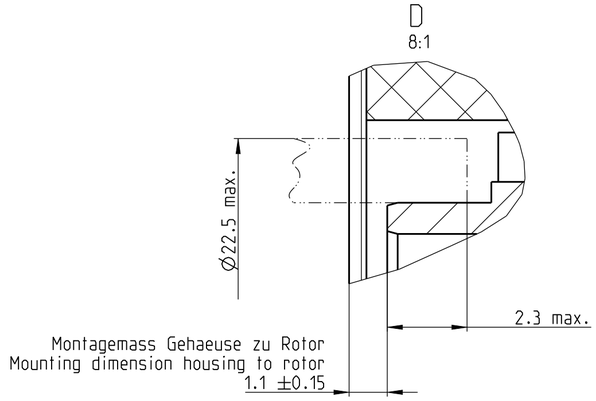

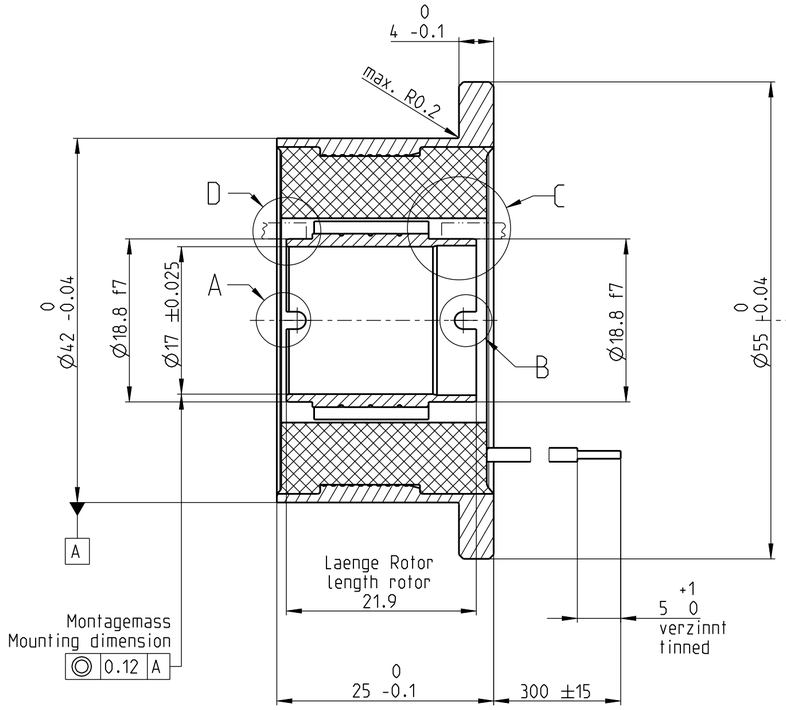

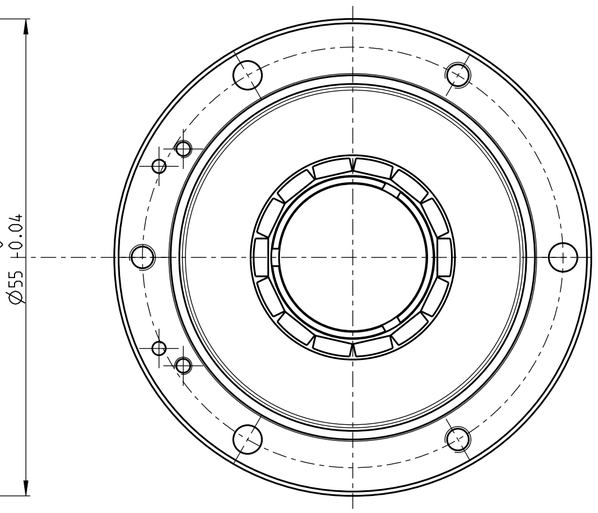

3:2

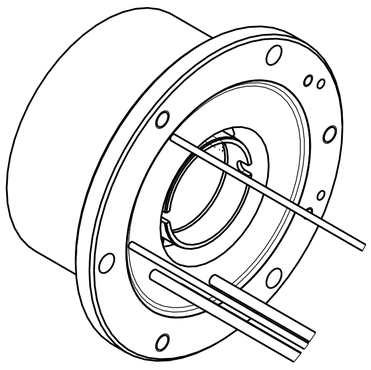

Rotor und Stator werden getrennt angeliefert
Rotor and stator delivered seperated

Kabelbelegung/wiring diagram		
AWG18	Kabel rot cable red	= Wicklung 1 = winding 1
AWG18	Kabel schwarz cable black	= Wicklung 2 = winding 2
AWG18	Kabel weiss cable white	= Wicklung 3 = winding 3
AWG24	Kabel violett cable violet	= NTC in
AWG24	Kabel blau cable blue	= NTC out

EC frameless DT38M

PART NUMBER	FINISHED PRODUCT					BASIC NUMBER
TOLERANCING	GENERAL TOLERANCES	SCREW THREAD TOLERANCES	GEOMETRICAL TOLERANCES	SURFACES	EDGES	N/A N/A
ISO 8015	ISO 2768:1989-m	ISO 965-1	ISO 1101	N/A	N/A	N/A

DOCUMENT TYPE	Dimensional Drawing	CO-NO: A100035968	DATE	NAME	SCALE	2:1	3D MODEL
TITLE		CREATED	15.09.2022	MMAGMRHI	SHEETS	A2/1/1	9488995
EC frameless DT38M		MODIFIED	07.09.2023	MMAGRENI	DIMENSION UNITS	PROJECTION METHOD	
		RELEASED	07.09.2023	MMAGMUAG	mm	ISO 5456-1	
PART NUMBER	PART REVISION	DOCUMENT NUMBER					DOC REVISION
		9489108					04

maxon

www.maxongroup.com

©2022 maxon. All rights reserved. Any use, in particular reproduction, editing, translation and copying without prior written approval is not permitted (contact: maxon international ltd., Brunnigstrasse 220, CH-6072 Sachseln, +41 41 666 1500, www.maxongroup.com). Infringements will be prosecuted under civil and criminal law. The mentioned Trademarks belong to their respective owner and are protected under Trademark laws.

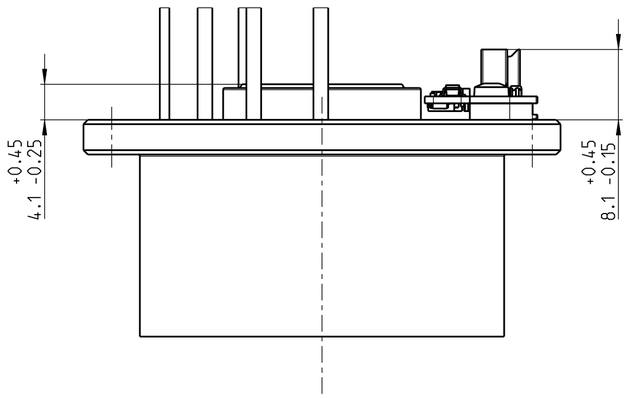

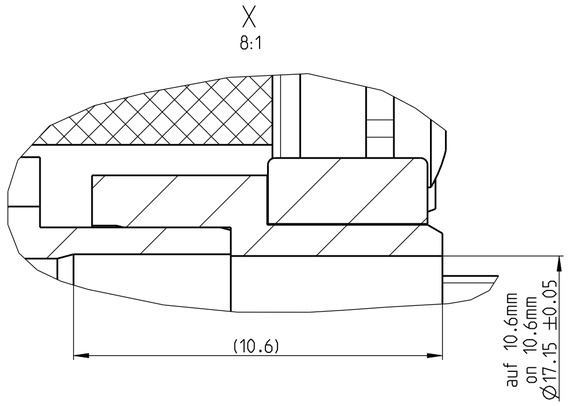

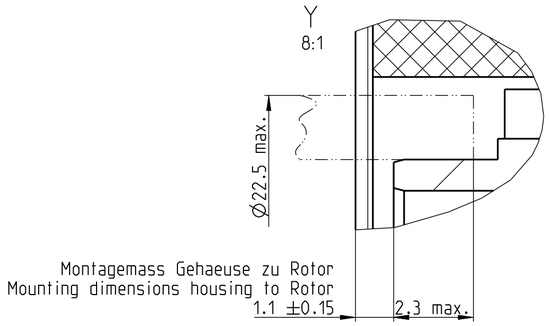

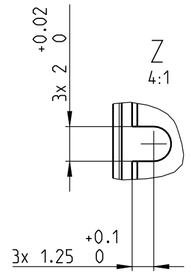

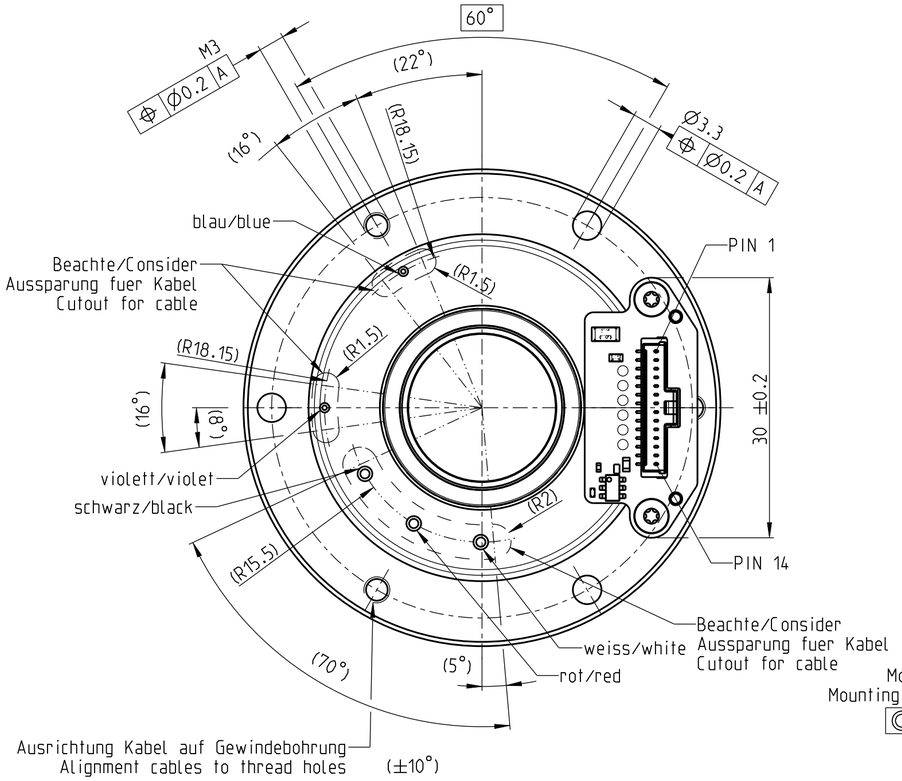

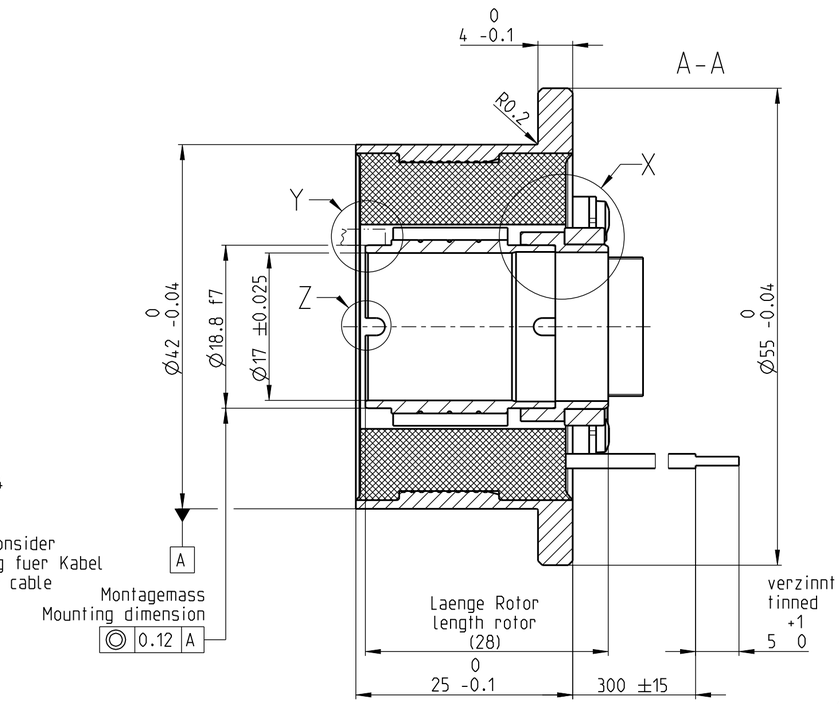

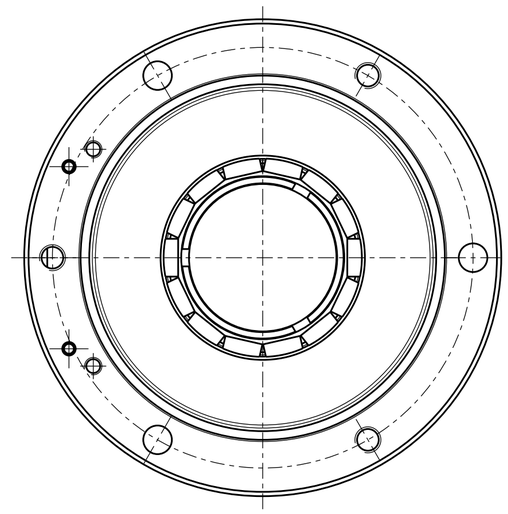

3:2

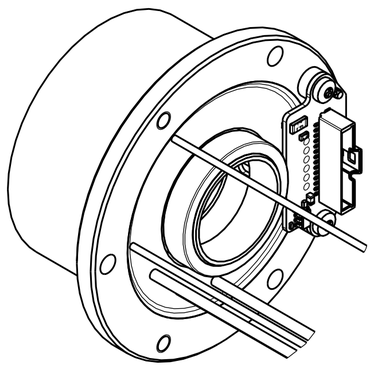

Steckerbelegung Kommutierung + Encoder PIN allocation Commutation + Encoder	
Pin	Signal
PIN 14	Vcc
PIN 13	GND
PIN 12	A/
PIN 11	A
PIN 10	B/
PIN 9	B
PIN 8	N.C.
PIN 7	N.C.
PIN 6	H1
PIN 5	H2
PIN 4	H3
PIN 3	N.C.
PIN 2	NTC+
PIN 1	NTC-

Kabelbelegung/wiring diagram		
AWG18	Kabel rot cable red	= Wicklung 1 = winding 1
AWG18	Kabel schwarz cable black	= Wicklung 2 = winding 2
AWG18	Kabel weiss cable white	= Wicklung 3 = winding 3
AWG24	Kabel violett cable violet	= NTC in
AWG24	Kabel blau cable blue	= NTC out

ACHTUNG / ATTENTION

Handhabungsvorschriften und Verpackungsmethoden beachten
observe precautions for handling and packing methods

Elektrostatisch gefaehrdete Bauelemente
electrostatic sensitive devices

Stator und Rotor werden getrennt verpackt und angeliefert.
Stator und Rotor muessen gepaart montiert werden.
Rotor and stator are separeted packed and delivered.
Stator and rotor must assembled paired

	maxon tacho ENC TSC MAG maxon motor EC frameless DT38M					
PART NUMBER	FINISHED PRODUCT					BASIC NUMBER
TOLERANCING: ISO 8015	GENERAL TOLERANCES: ISO 2768:1989-m	SCREW THREAD TOLERANCES: ISO 965-1	GEOMETRICAL TOLERANCES: ISO 1101	SURFACES: N/A	EDGES: N/A	N/A N/A N/A

DOCUMENT TYPE: Dimensional Drawing	CO-NO: A100031350	DATE	NAME	SCALE	2:1	3D MODEL
TITLE: EC frameless DT38M + TSX MAG (axial)	CREATED	24.11.2022	mmagsath	SHEETS	A2/1/1	9488995
	MODIFIED	17.11.2023	MMAGRENI	DIMENSION UNITS: mm	PROJECTION METHOD: ISO 5456-1	
	RELEASED	17.11.2023	MMAGMUAG			

PART NUMBER	PART REVISION	DOCUMENT NUMBER	DOC REVISION
		9723273	02

maxon www.maxongroup.com

©2022 maxon. All rights reserved. Any use, in particular reproduction, editing, translation and copying without prior written approval is not permitted (contact: maxon international ltd., Brueniglstrasse 220, CH-6072 Sachseln, +41 41 666 1500, www.maxongroup.com). Infringements will be prosecuted under civil and criminal law. The mentioned Trademarks belong to their respective owner and are protected under Trademark laws.

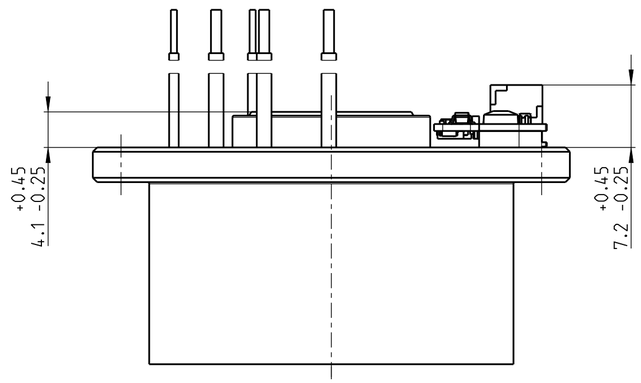

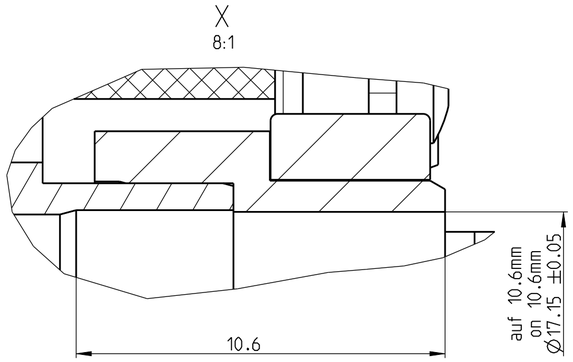

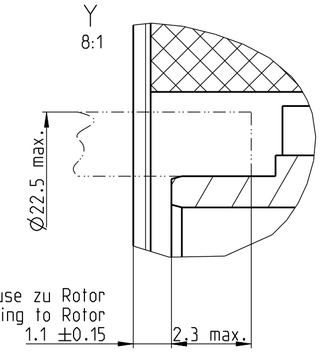

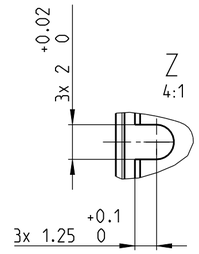

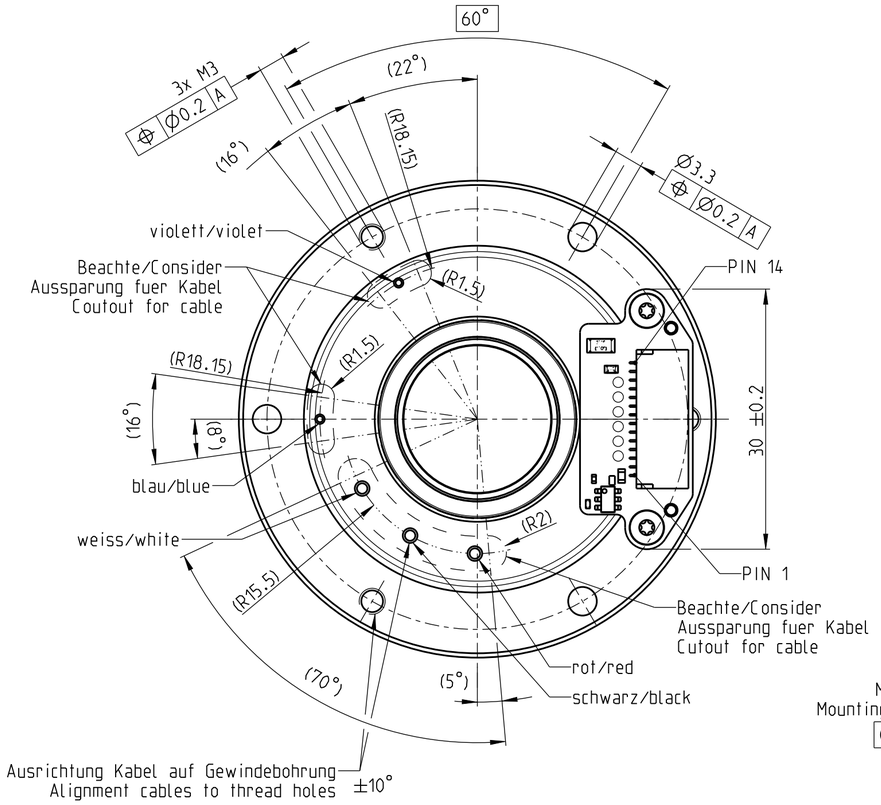

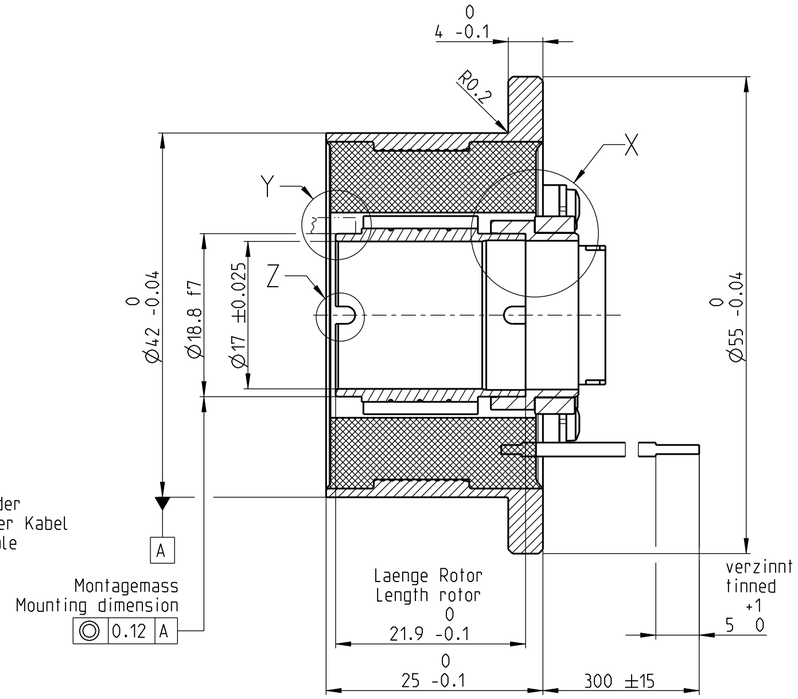

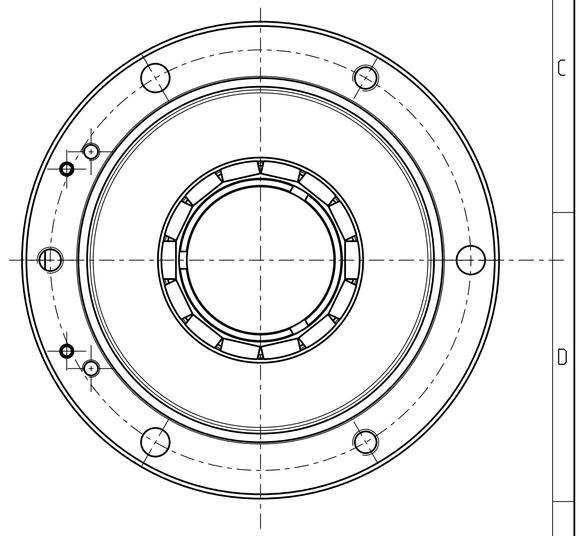

3:2

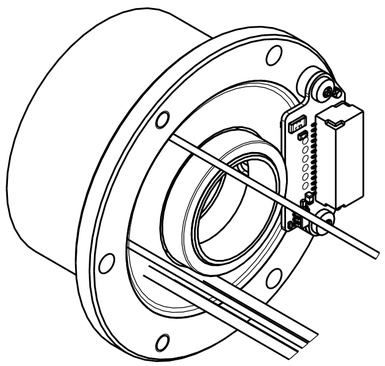

Steckerbelegung Kommutierung + Encoder PIN allocation Commutation + Encoder	
Pin	Signal
PIN 1	Vcc
PIN 2	GND
PIN 3	A/
PIN 4	A
PIN 5	B/
PIN 6	B
PIN 7	N.C.
PIN 8	N.C.
PIN 9	H1
PIN 10	H2
PIN 11	H3
PIN 12	N.C.
PIN 13	NTC+
PIN 14	NTC-

Kabelbelegung/wiring diagram		
AWG18	Kabel rot cable red	= Wicklung 1 = winding 1
AWG18	Kabel schwarz cable black	= Wicklung 2 = winding 2
AWG18	Kabel weiss cable white	= Wicklung 3 = winding 3
AWG24	Kabel violett cable violet	= NTC in
AWG24	Kabel blau cable blue	= NTC out

ACHTUNG / ATTENTION

Handhabungsvorschriften und Verpackungsmethoden beachten
observe precautions for handling and packing methods

Elektrostatisch gefaehrdete Bauelemente
electrostatic sensitive devices

Stator und Rotor werden getrennt verpackt und angeliefert.
Stator und Rotor muessen gepaart montiert werden.
Rotor and stator are separeted packed and delivered.
Stator and rotor must assembled paired

	maxon tacho ENC TSC MAG						
	maxon motor EC frameless DT38M						
PART NUMBER	FINISHED PRODUCT					BASIC NUMBER	
TOLERANCING: ISO 8015	GENERAL TOLERANCES: ISO 2768-m	SCREW THREAD TOLERANCES: ISO 965-1	GEOMETRICAL TOLERANCES: ISO 1101	SURFACES: N/A	EDGES: N/A	N/A N/A: N/A	
DOCUMENT TYPE: Dimensional Drawing		CO-ND: A100027864	DATE	NAME	SCALE: 2:1	3D MODEL	
TITLE: EC frameless DT38M + TSX MAG (radial)		CREATED	24.11.2022	mmagsath	SHEETS: A2/1/1	9488995	
		MODIFIED	01.06.2023	MMAGMUAG	DIMENSION UNITS: mm	PROJECTION METHOD: ISO 5456-1	
		RELEASED	01.06.2023	MMAGMUAG			
PART NUMBER	PART REVISION	DOCUMENT NUMBER: 9723262				DOC REVISION: 01	
maxon		www.maxongroup.com					

©2022 maxon. All rights reserved. Any use, in particular reproduction, editing, translation and copying without prior written approval is not permitted (contact: maxon international ltd., Brueningstrasse 220, CH-6072 Sachseln, +41 41 666 1500, www.maxongroup.com). Infringements will be prosecuted under civil and criminal law. The mentioned trademarks belong to their respective owner and are protected under trademark laws.

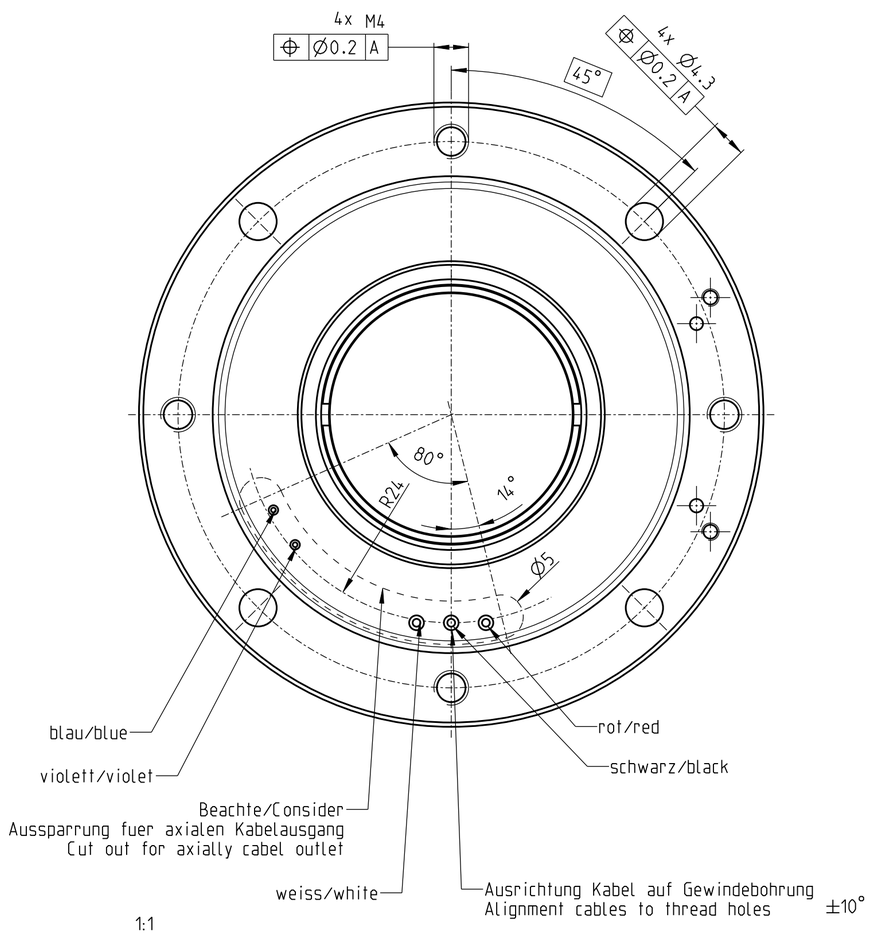

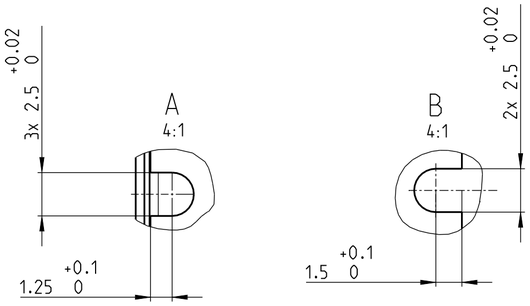

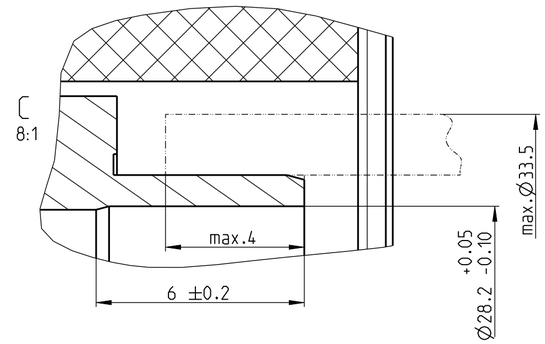

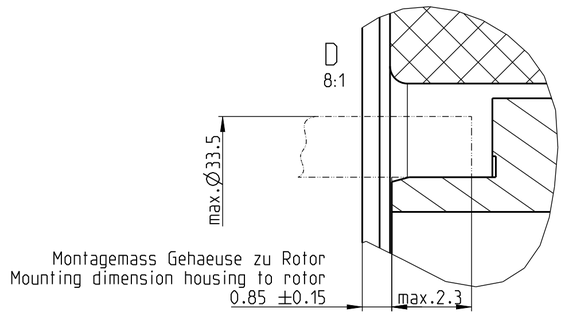

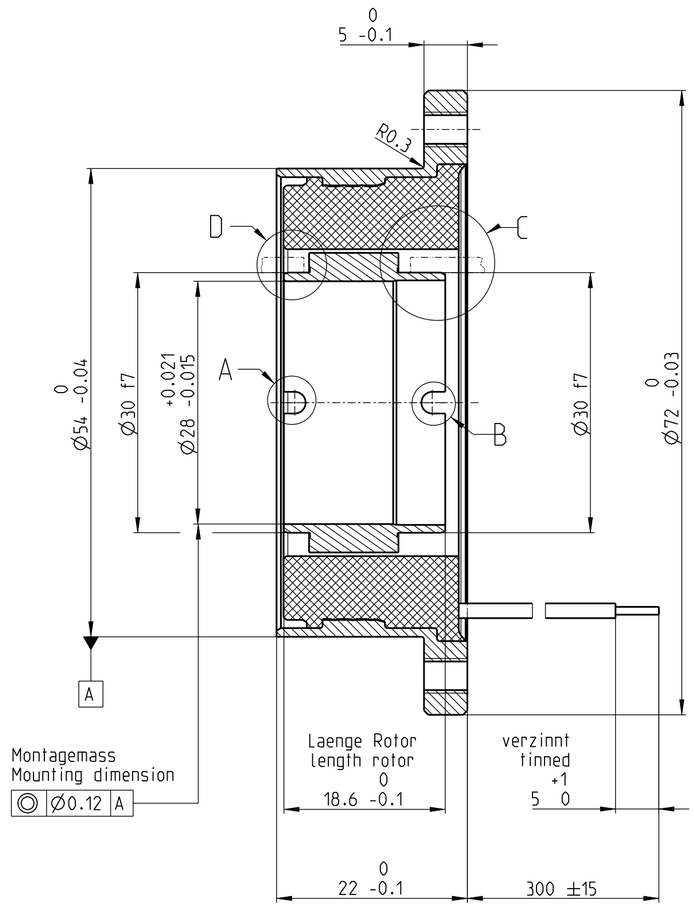

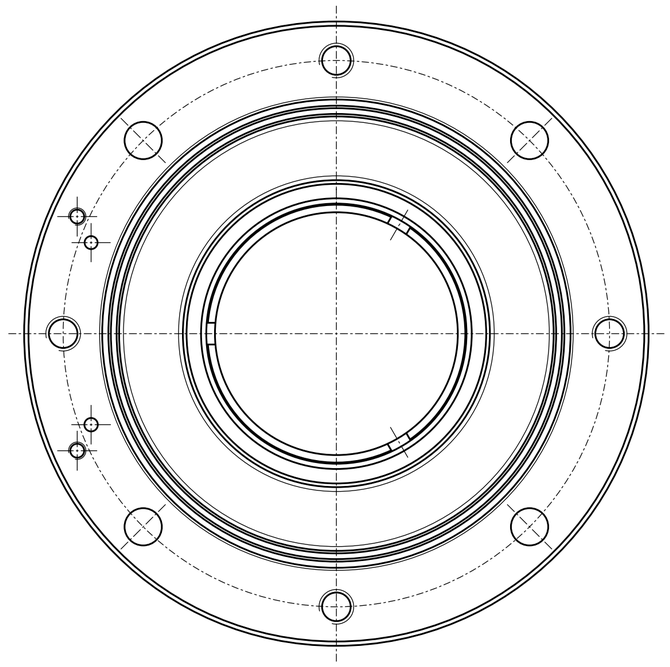

1:1

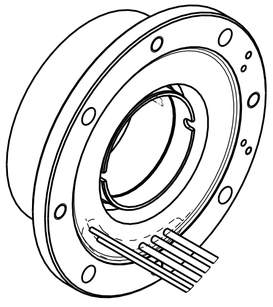

Kabelbelegung/wiring diagram		
AWG18	Kabel rot cable red	= Wicklung 1 = winding 1
AWG18	Kabel schwarz cable black	= Wicklung 2 = winding 2
AWG18	Kabel weiss cable white	= Wicklung 3 = winding 3
AWG24	Kabel violett cable violet	= NTC in
AWG24	Kabel blau cable blue	= NTC out

Rotor und Stator werden getrennt angeliefert
Rotor and stator delivered seperated

EC frameless DT50S						
Artikel Nr./part no.	Fertigprodukt/finished product					Basis Nr./basic no.
TOLERANCING: ISO 8015	GENERAL TOLERANCES: ISO 2768-m	SCREW THREAD TOLERANCES: ISO 965-1	GEOMETRICAL TOLERANCES: ISO 1101	SURFACES: N/A	EDGES: N/A	N/A N/A N/A

DOCUMENT TYPE: Dimensional Drawing	CO-NO: 19642	DATE	NAME	SCALE	2:1	3D MODEL
TITLE: EC frameless DT50S	CREATED	11.09.2021	MMAGMUAG	SHEETS	A2/1/1	8335060
	MODIFIED	06.04.2022	MMAGMUAG	DIMENSION UNITS: mm	PROJECTION METHOD: ISO 5456-1	
	RELEASED	07.04.2022	MMAGROES			
PART NUMBER	PART REVISION	DOCUMENT NUMBER: 8335057				DOC REVISION: 04
maxon		www.maxongroup.com				

Aenderungen von Produkt oder Prozessen nur mit schriftlicher Freigabe durch maxon. © Alle Rechte vorbehalten. Nutzung nur gemäss schriftlicher Vereinbarung erlaubt. / Modifications of product or processes only upon written approval of maxon. © All rights reserved. Use permitted only as agreed in writing.

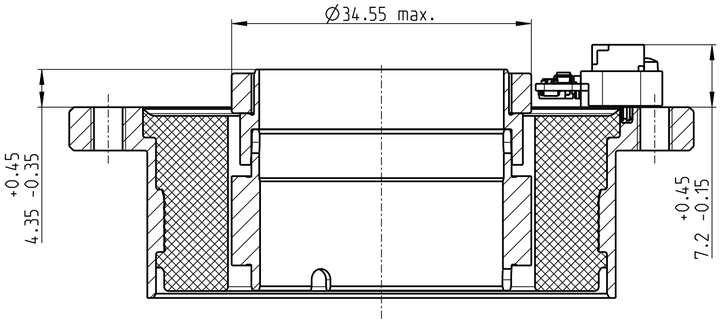

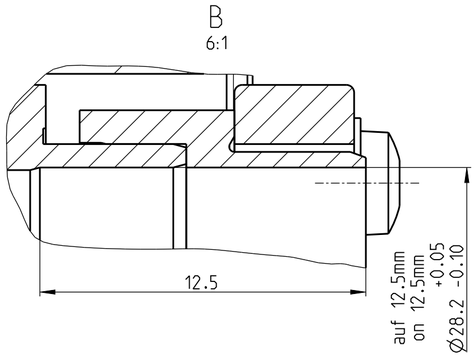

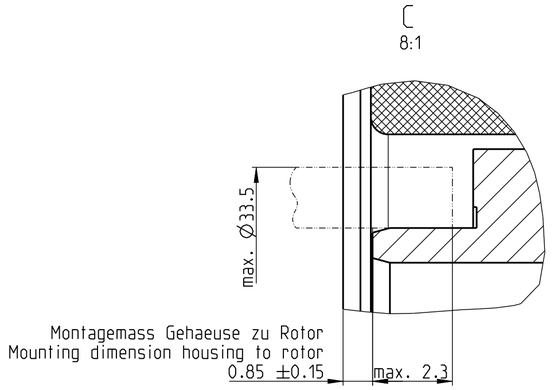

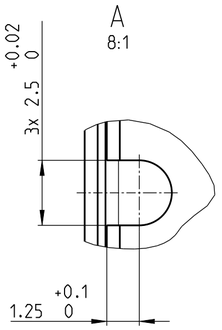

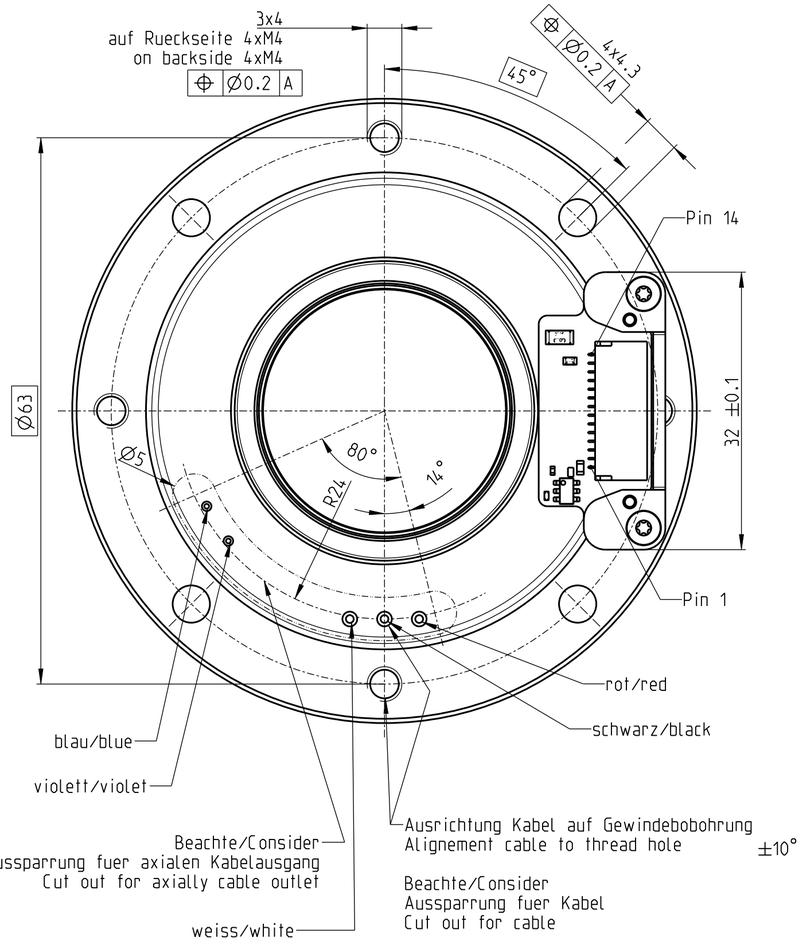

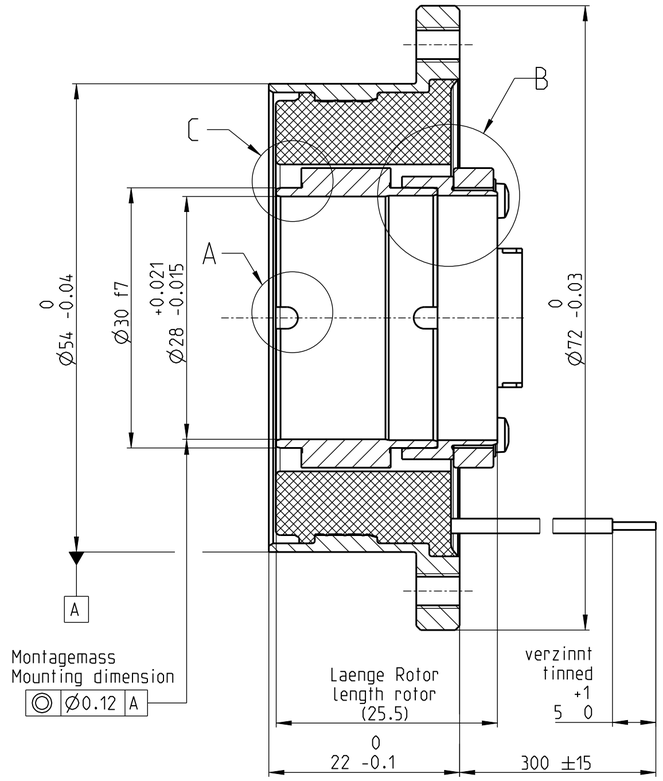

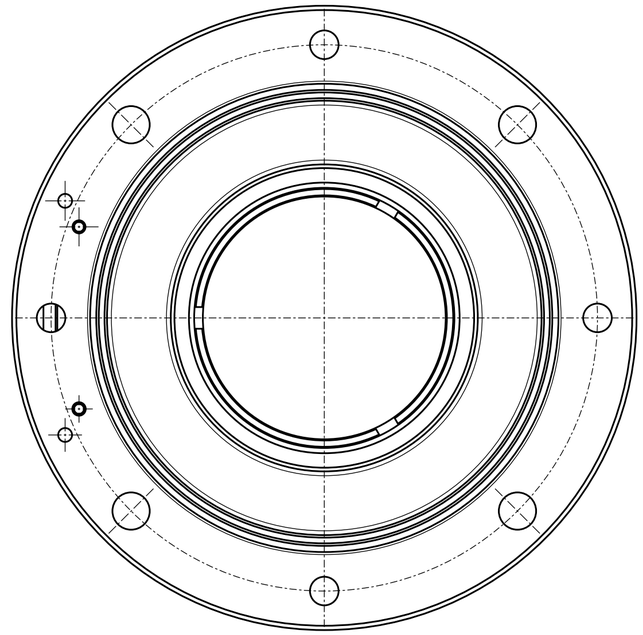

Steckerbelegung Kommutierung + Encoder PIN allocation Commutation + Encoder	
Pin	Signal
PIN 1	Vcc
PIN 2	GND
PIN 3	A/
PIN 4	A
PIN 5	B/
PIN 6	B
PIN 7	N.C.
PIN 8	N.C.
PIN 9	H1
PIN 10	H2
PIN 11	H3
PIN 12	N.C.
PIN 13	NTC+
PIN 14	NTC-

Kabelbelegung/wiring diagram		
AWG18	Kabel rot cable red	= Wicklung 1 = winding 1
AWG18	Kabel schwarz cable black	= Wicklung 2 = winding 2
AWG18	Kabel Kabel cable cable	= Wicklung 3 = winding 3
AWG24	Kabel violett cable violet	= NTC in
AWG24	Kabel blau cable blue	= NTC out

1:1

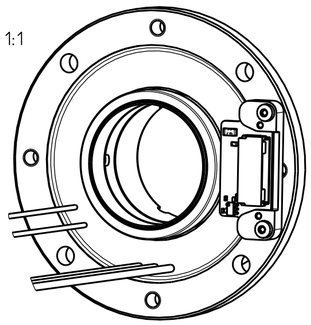

ACHTUNG / ATTENTION

Handhabungsvorschriften und Verpackungsmethoden beachten
observe precautions for handling and packing methods

Elektrostatisch gefaehrdete Bauelemente
electrostatic sensitive devices

Stator und Rotor werden getrennt verpackt und angeliefert.
Stator und Rotor muessen gepaart montiert werden.
Rotor and stator are separeted packed and delivered.
Stator and rotor must assembled paired

N/A	maxon tacho ENC TSX MAG	N/A
N/A	maxon motor EC frameless DT50S	N/A
Artikel Nr./part no.	Fertigprodukt/finished product	Basis Nr./basic no.

TOLERANCING	GENERAL TOLERANCES	SCREW THREAD TOLERANCES	GEOMETRICAL TOLERANCES	SURFACES	EDGES	N/A N/A
ISO 8015	ISO 2768-m	ISO 965-1	ISO 1101	N/A	N/A	N/A

DOCUMENT TYPE	Assembly Drawing	CO-ND: 119642	DATE	NAME	SCALE	2:1	3D MODEL
TITLE EN: Dimensional Drawing		CREATED	07.12.2021	MMAGMUAG	SHEETS	A2/1/1	8685003
TITLE DE: Massbild		MODIFIED	06.04.2022	MMAGMUAG	DIMENSION UNITS: mm	PROJECTION METHOD: ISO 5456-1	
		RELEASED	07.04.2022	MMAGROES			

PART NUMBER	PART REVISION	DOCUMENT NUMBER	DOC REVISION
		8685004	02

maxon — www.maxongroup.com

Aenderungen von Produkt oder Prozessen nur mit schriftlicher Freigabe durch maxon. © Alle Rechte vorbehalten. Nutzung nur gemaess schriftlicher Vereinbarung erlaubt. / Modifications of product or processes only upon written approval of maxon. © All rights reserved. Use permitted only as agreed in writing.

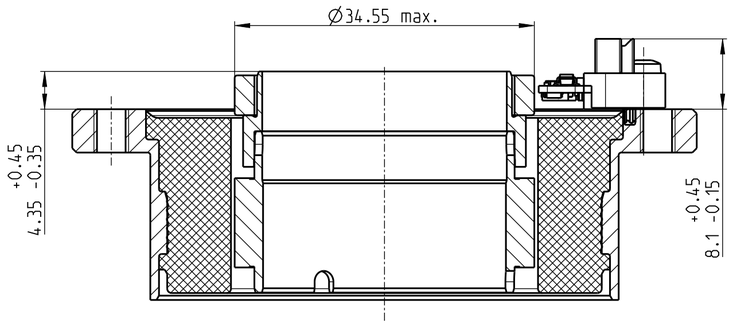

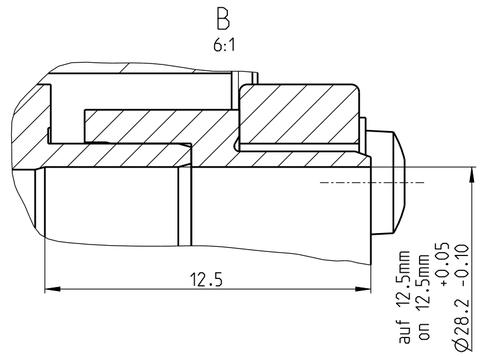

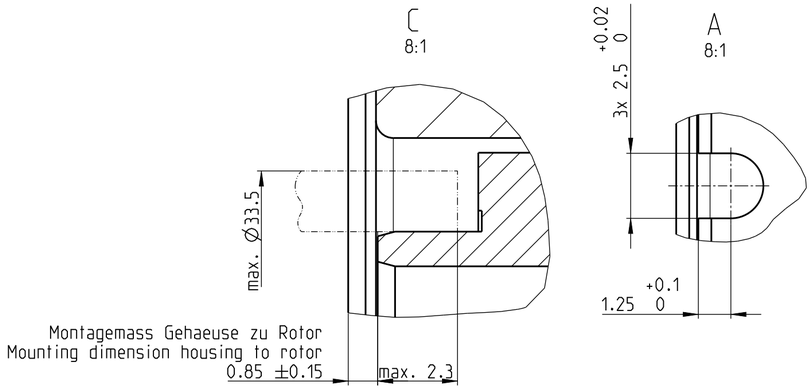

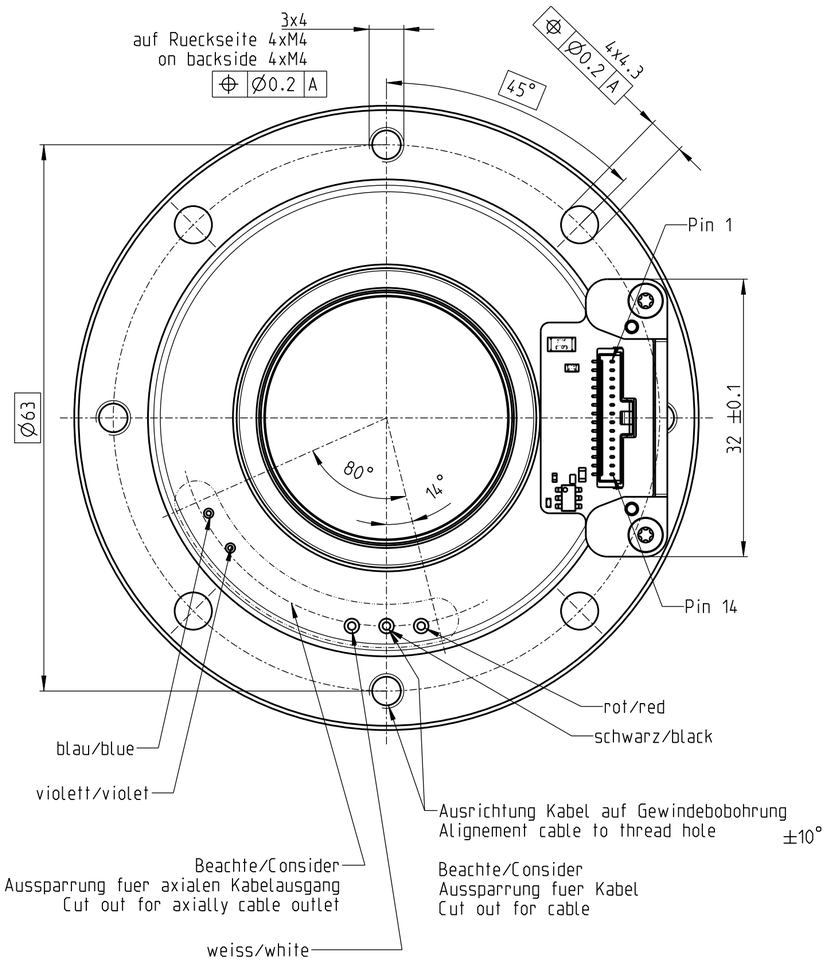

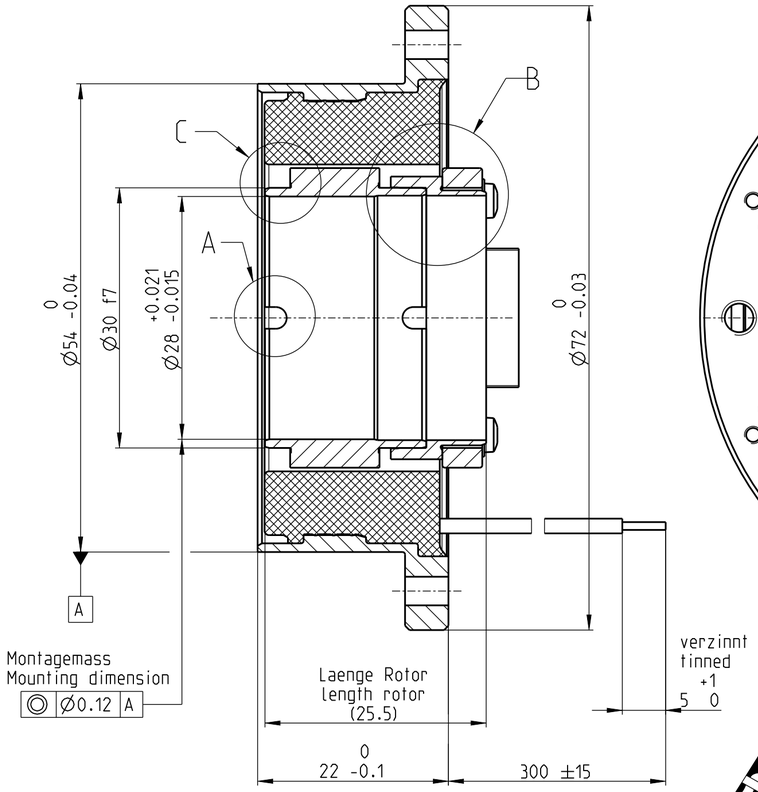

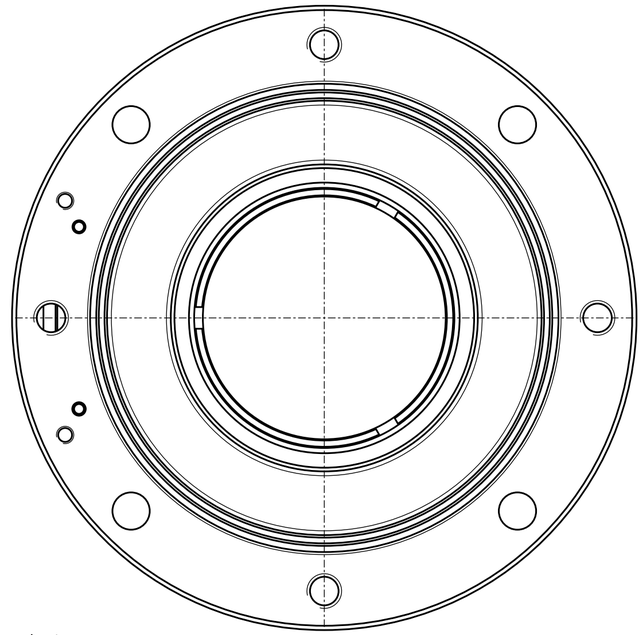

Steckerbelegung Kommutierung + Encoder PIN allocation Commutation + Encoder	
Pin	Signal
PIN 14	Vcc
PIN 13	GND
PIN 12	A/
PIN 11	A
PIN 10	B/
PIN 9	B
PIN 8	N.C.
PIN 7	N.C.
PIN 6	H1
PIN 5	H2
PIN 4	H3
PIN 3	N.C.
PIN 2	NTC+
PIN 1	NTC-

Kabelbelegung/wiring diagram		
AWG18	Kabel rot cable red	= Wicklung 1 = winding 1
AWG18	Kabel schwarz cable black	= Wicklung 2 = winding 2
AWG18	Kabel Kabel cable cable	= Wicklung 3 = winding 3
AWG24	Kabel violett cable violet	= NTC in
AWG24	Kabel blau cable blue	= NTC out

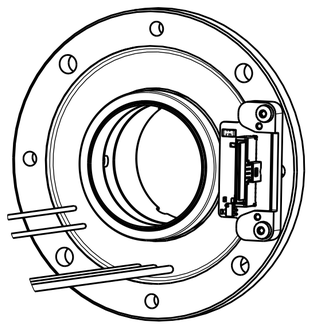

ACHTUNG / ATTENTION

Handhabungsvorschriften und Verpackungsmethoden beachten
observe precautions for handling and packing methods

Elektrostatisch gefaehrdete Bauelemente
electrostatic sensitive devices

Stator und Rotor werden getrennt verpackt und angeliefert.
Stator und Rotor muessen gepaart montiert werden.
Rotor and stator are separeted packed and delivered.
Stator and rotor must assembled paired

N/A	maxon tacho ENC TSX MAG	N/A
N/A	maxon motor EC frameless DT50S	N/A
Artikel Nr./part no.	Fertigprodukt/finished product	Basis Nr./basic no.

TOLERANCING	GENERAL TOLERANCES	SCREW THREAD TOLERANCES	GEOMETRICAL TOLERANCES	SURFACES	EDGES	N/A N/A
ISO 8015	ISO 2768-m	ISO 965-1	ISO 1101	N/A	N/A	N/A

DOCUMENT TYPE	Dimensional Drawing	CO-ND: 119642	DATE	NAME	SCALE	2:1	3D MODEL
TITLE EN	Dimensional Drawing	CREATED	07.12.2021	MMAGMUAG	SHEETS	A2/1/1	8685003
TITLE DE	Massbild	MODIFIED	06.04.2022	MMAGMUAG	DIMENSION UNITS: mm	PROJECTION METHOD: ISO 5456-1	
		RELEASED	07.04.2022	MMAGROES			
PART NUMBER	PART REVISION	DOCUMENT NUMBER: 8685612					DOC REVISION: 02

maxon

www.maxongroup.com

Aenderungen von Produkt oder Prozessen nur mit schriftlicher Freigabe durch maxon. © Alle Rechte vorbehalten. Nutzung nur gemäess schriftlicher Vereinbarung erlaubt. / Modifications of product or processes only upon written approval of maxon. © All rights reserved. Use permitted only as agreed in writing.

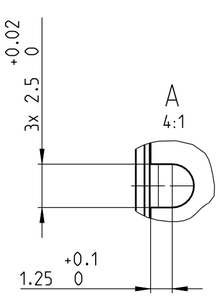

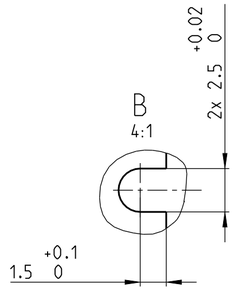

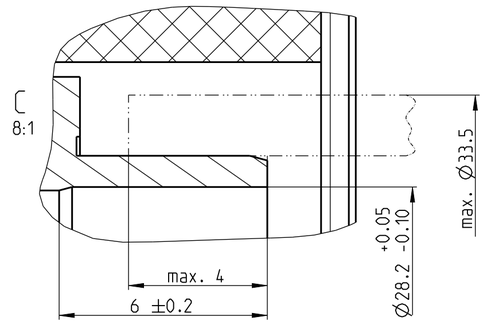

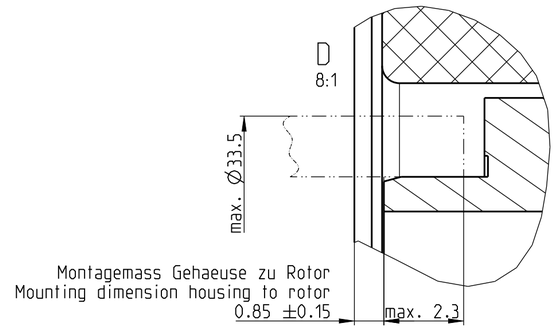

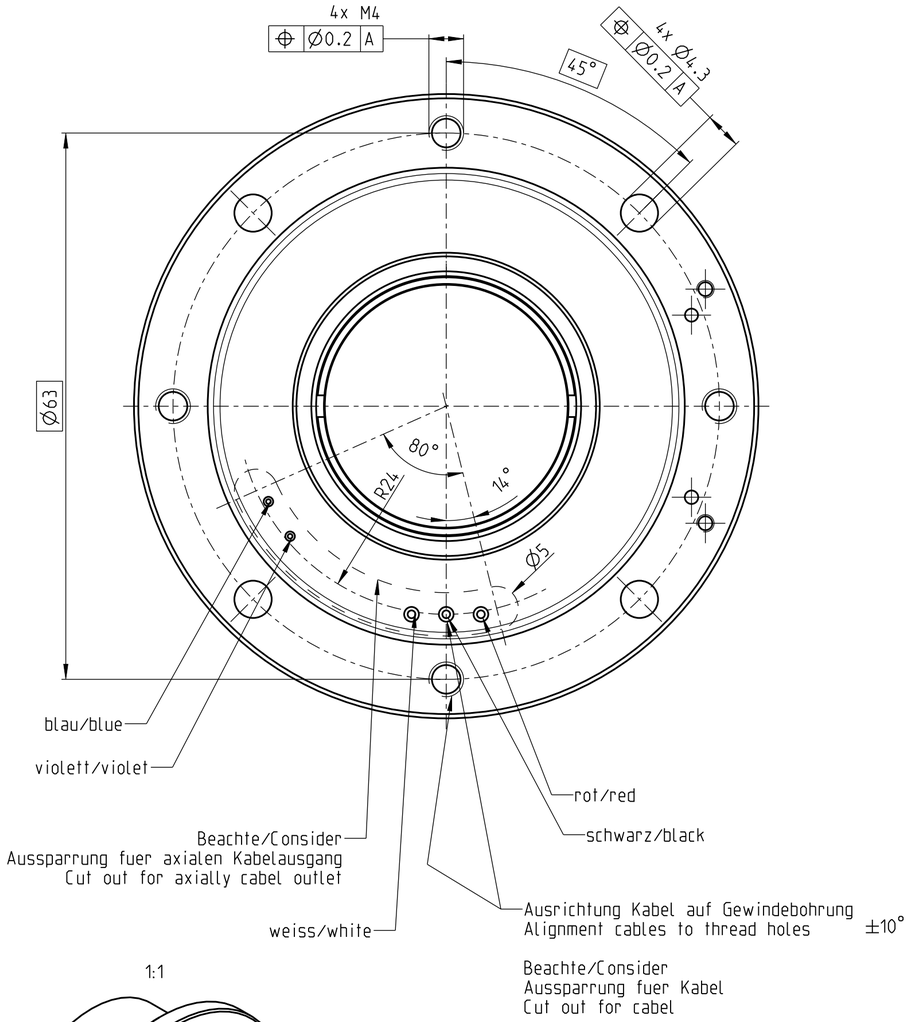

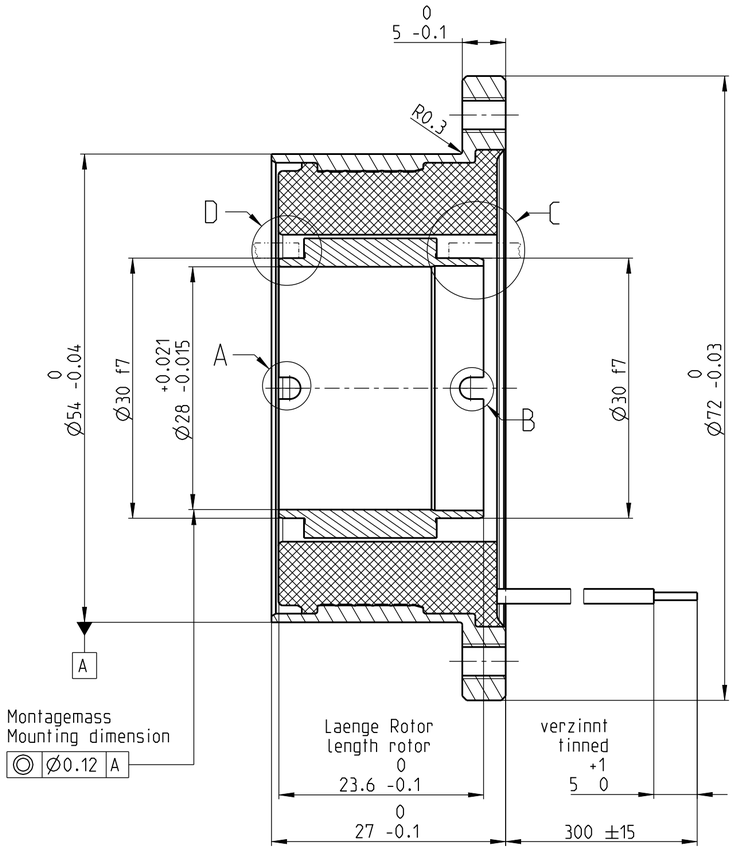

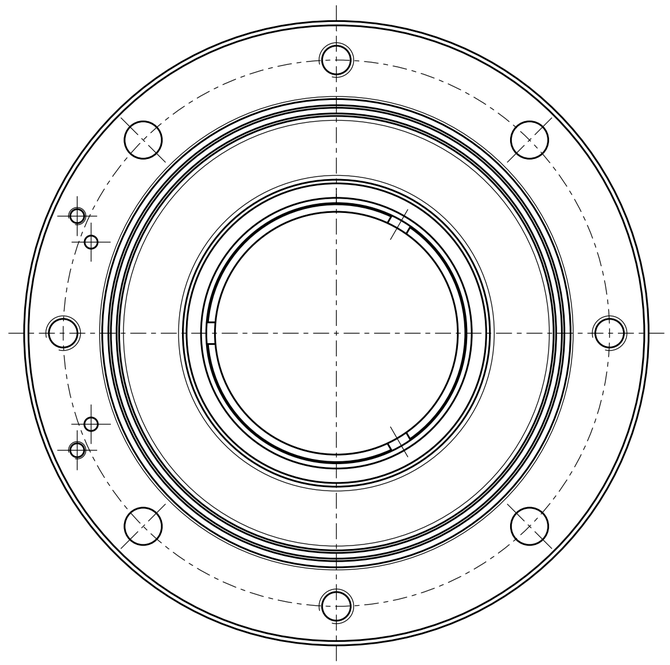

1:1

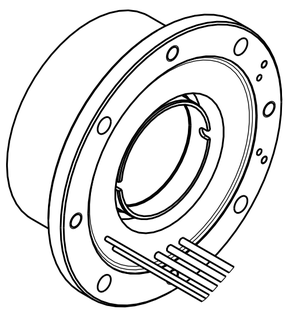

Kabelbelegung/wiring diagram		
AWG18	Kabel rot cable red	= Wicklung 1 = winding 1
AWG18	Kabel schwarz cable black	= Wicklung 2 = winding 2
AWG18	Kabel weiss cable white	= Wicklung 3 = winding 3
AWG24	Kabel violett cable violet	= NTC in
AWG24	Kabel blau cable blue	= NTC out

Rotor und Stator werden getrennt angeliefert
Rotor and stator delivered seperated

EC frameless DT50M						
Artikel Nr./part no.	Fertigprodukt/finished product					Basis Nr./basic no.
TOLERANCING: ISO 8015	GENERAL TOLERANCES: ISO 2768-m	SCREW THREAD TOLERANCES: ISO 965-1	GEOMETRICAL TOLERANCES: ISO 1101	SURFACES: N/A	EDGES: N/A	N/A N/A: N/A

DOCUMENT TYPE: Dimensional Drawing	CO-NO: 119642	DATE	NAME	SCALE	2:1	3D MODEL
TITLE: EC frameless DT50M	CREATED	24.08.2021	MMAGMUAG	SHEETS	A2/1/1	8284624
	MODIFIED	06.04.2022	MMAGMUAG	DIMENSION UNITS: mm	PROJECTION METHOD: ISO 5456-1	
	RELEASED	07.04.2022	MMAGROES			
PART NUMBER	PART REVISION	DOCUMENT NUMBER: 8285347				DOC REVISION: 03

maxon

www.maxongroup.com

Aenderungen von Produkt oder Prozessen nur mit schriftlicher Freigabe durch maxon. © Alle Rechte vorbehalten. Nutzung nur gemaess schriftlicher Vereinbarung erlaubt. / Modifications of product or processes only upon written approval of maxon. © All rights reserved. Use permitted only as agreed in writing.

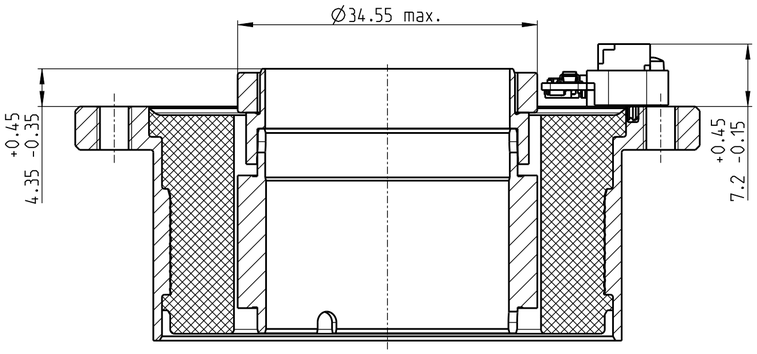

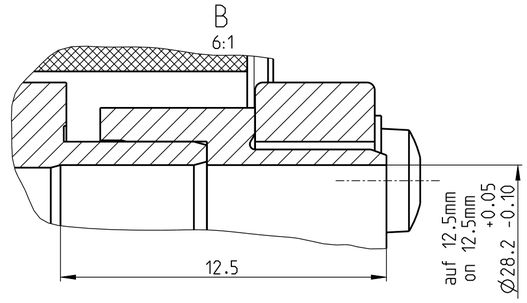

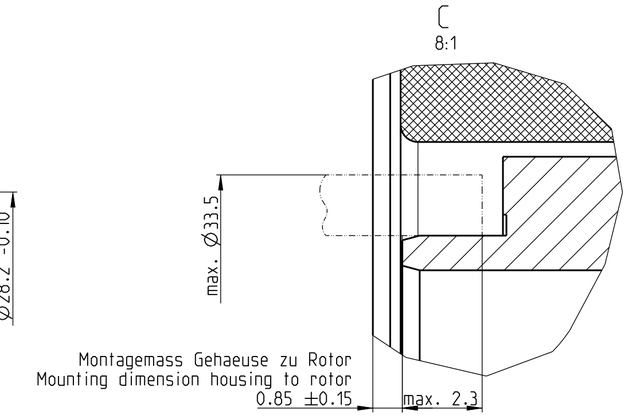

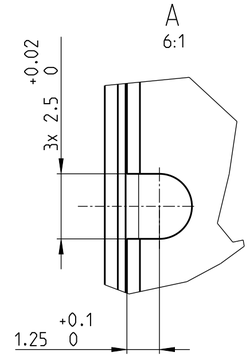

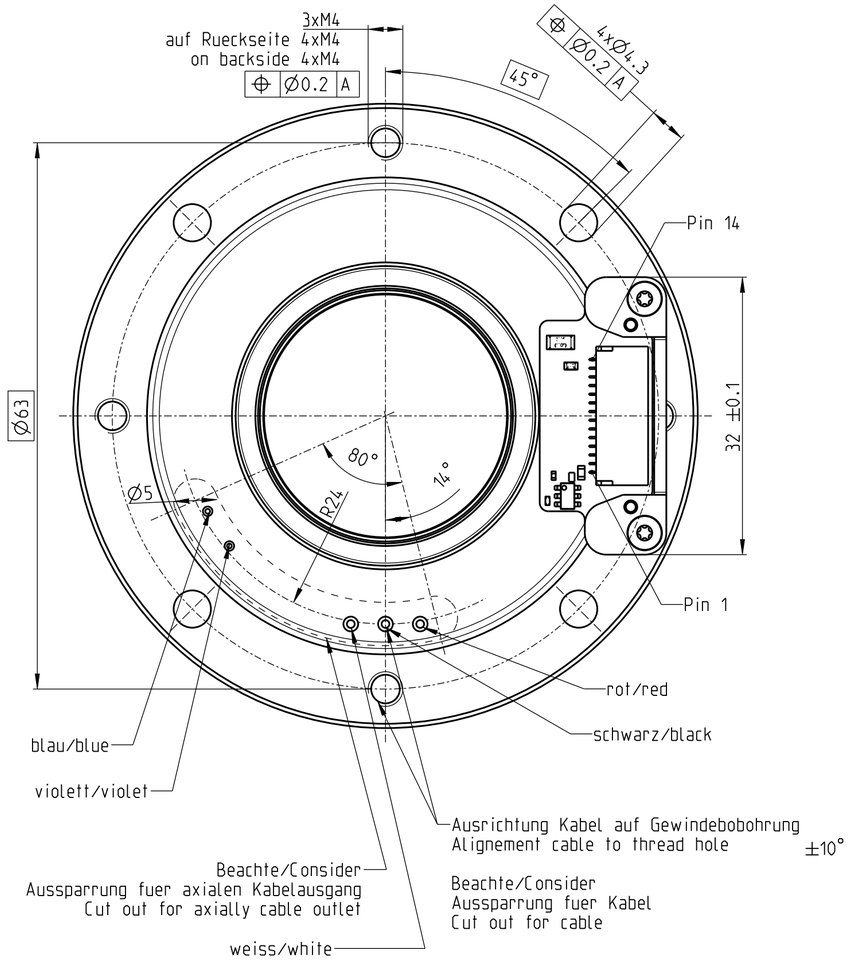

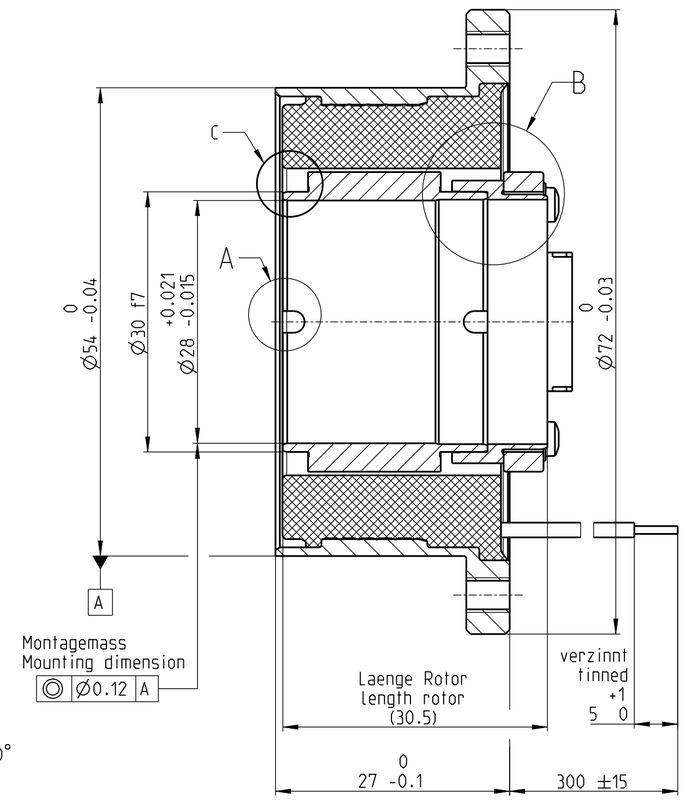

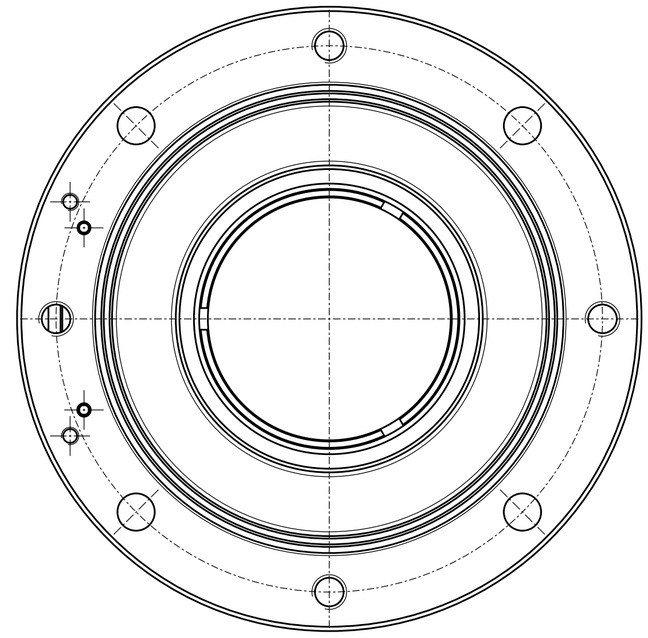

Steckerbelegung Kommutierung + Encoder PIN allocation Commutation + Encoder	
Pin	Signal
PIN 1	Vcc
PIN 2	GND
PIN 3	A/
PIN 4	A
PIN 5	B/
PIN 6	B
PIN 7	N.C.
PIN 8	N.C.
PIN 9	H1
PIN 10	H2
PIN 11	H3
PIN 12	N.C.
PIN 13	NTC+
PIN 14	NTC-

Kabelbelegung/wiring diagram		
AWG18	Kabel rot cable red	= Wicklung 1 = winding 1
AWG18	Kabel schwarz cable black	= Wicklung 2 = winding 2
AWG18	Kabel Kabel cable cable	= Wicklung 3 = winding 3
AWG24	Kabel violett cable violet	= NTC in
AWG24	Kabel blau cable blue	= NTC out

1:1

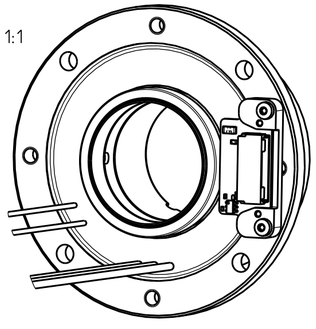

ACHTUNG / ATTENTION

Handhabungsvorschriften und Verpackungsmethoden beachten
observe precautions for handling and packing methods

Elektrostatisch gefaehrdete Bauelemente
electrostatic sensitive devices

Stator und Rotor werden getrennt verpackt und angeliefert.
Stator und Rotor muessen gepaart montiert werden.
Rotor and stator are separeted packed and delivered.
Stator and rotor must assembled paired

N/A	maxon tacho ENC TSX MAG	N/A
N/A	maxon motor EC frameless DT50M	N/A
Artikel Nr./part no.	Fertigprodukt/finished product	Basis Nr./basic no.

TOLERANCING	GENERAL TOLERANCES	SCREW THREAD TOLERANCES	GEOMETRICAL TOLERANCES	SURFACES	EDGES	N/A N/A
ISO 8015	ISO 2768-m	ISO 965-1	ISO 1101	N/A	N/A	N/A

DOCUMENT TYPE	Dimensional Drawing	CO-ND: 119642	DATE	NAME	SCALE	2:1	3D MODEL
TITLE EN	Dimensional Drawing	CREATED	01.10.2021	MMAGMUAG	SHEETS	A2/1/1	8369329
TITLE DE	Massbild	MODIFIED	06.04.2022	MMAGMUAG	DIMENSION UNITS: mm	PROJECTION METHOD: ISO 5456-1	
		RELEASED	07.04.2022	MMAGROES			
PART NUMBER	PART REVISION	DOCUMENT NUMBER: 8389213					DOC REVISION: 03

maxon

www.maxongroup.com

Aenderungen von Produkt oder Prozessen nur mit schriftlicher Freigabe durch maxon. © Alle Rechte vorbehalten. Nutzung nur gemaess schriftlicher Vereinbarung erlaubt. / Modifications of product or processes only upon written approval of maxon. © All rights reserved. Use permitted only as agreed in writing.

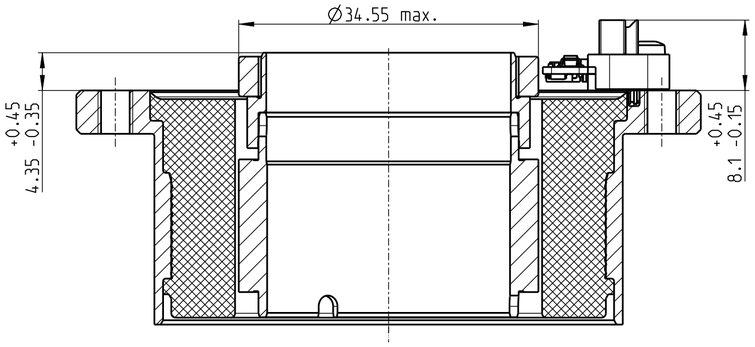

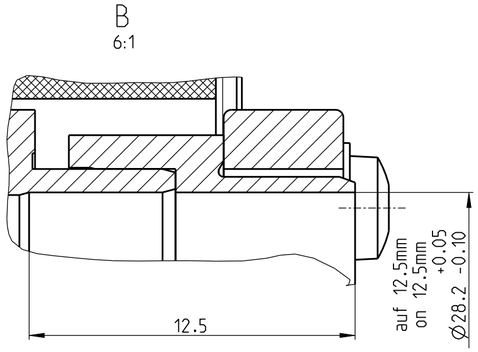

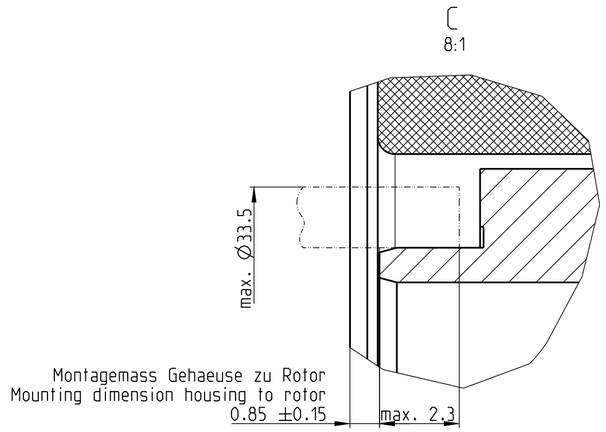

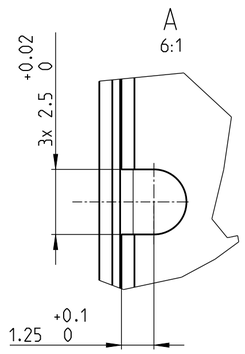

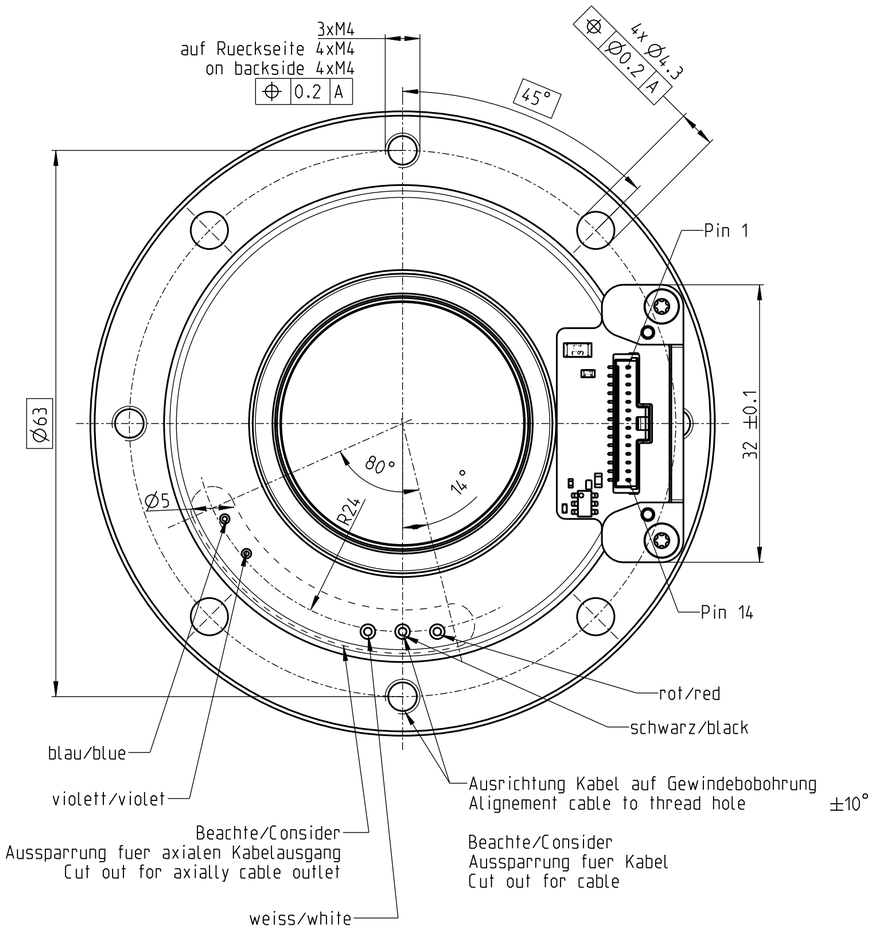

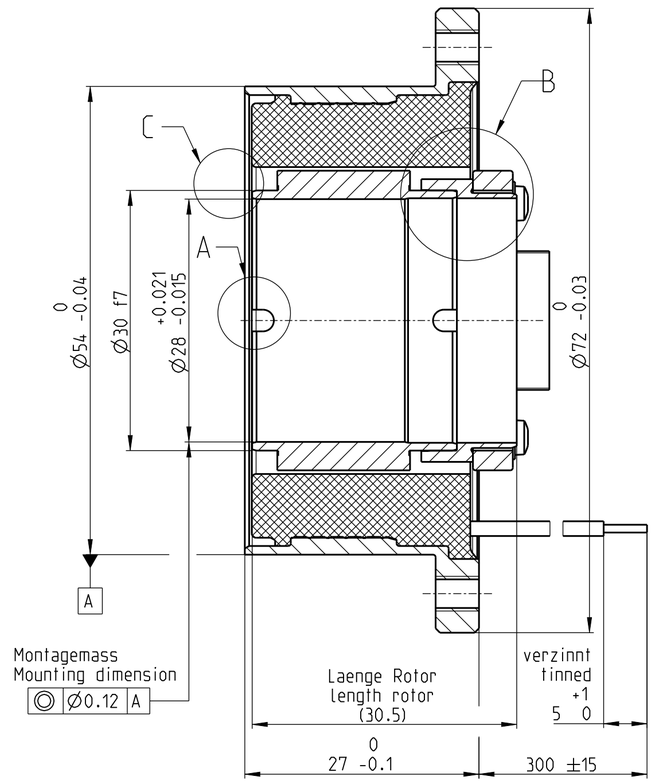

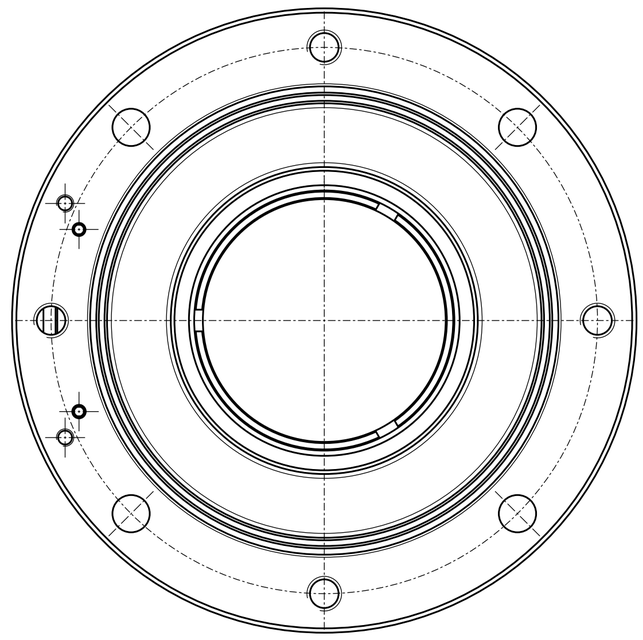

Steckerbelegung Kommutierung + Encoder PIN allocation Commutation + Encoder	
Pin	Signal
PIN 14	Vcc
PIN 13	GND
PIN 12	A/
PIN 11	A
PIN 10	B/
PIN 9	B
PIN 8	N.C.
PIN 7	N.C.
PIN 6	H1
PIN 5	H2
PIN 4	H3
PIN 3	N.C.
PIN 2	NTC+
PIN 1	NTC-

Kabelbelegung/wiring diagram		
AWG18	Kabel rot cable red	= Wicklung 1 = winding 1
AWG18	Kabel schwarz cable black	= Wicklung 2 = winding 2
AWG18	Kabel Kabel cable cable	= Wicklung 3 = winding 3
AWG24	Kabel violett cable violet	= NTC in
AWG24	Kabel blau cable blue	= NTC out

1:1

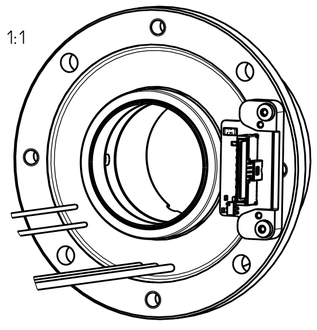

ACHTUNG / ATTENTION

Handhabungsvorschriften und Verpackungsmethoden beachten
observe precautions for handling and packing methods

Elektrostatisch gefaehrdete Bauelemente
electrostatic sensitive devices

Stator und Rotor werden getrennt verpackt und angeliefert.
Stator und Rotor muessen gepaart montiert werden.
Rotor and stator are separeted packed and delivered.
Stator and rotor must assembled paired

N/A	maxon tacho ENC TSX MAG	N/A
N/A	maxon motor EC frameless DT50M	N/A
Artikel Nr./part no.	Fertigprodukt/finished product	Basis Nr./basic no.

TOLERANCING	GENERAL TOLERANCES	SCREW THREAD TOLERANCES	GEOMETRICAL TOLERANCES	SURFACES	EDGES	N/A N/A
ISO 8015	ISO 2768-m	ISO 965-1	ISO 1101	N/A	N/A	N/A

DOCUMENT TYPE	Dimensional Drawing	CO-NO: 119642	DATE	NAME	SCALE	2:1	3D MODEL
TITLE EN	Dimensional Drawing	CREATED	24.09.2021	MMAGMUAG	SHEETS	A2/1/1	8369329
TITLE DE	Massbild	MODIFIED	07.04.2022	MMAGMUAG	DIMENSION UNITS	PROJECTION METHOD	
		RELEASED	07.04.2022	MMAGROES	mm	ISO 5456-1	
PART NUMBER	PART REVISION	DOCUMENT NUMBER					DOC REVISION
		8369889					04

maxon

www.maxongroup.com

Aenderungen von Produkt oder Prozessen nur mit schriftlicher Freigabe durch maxon. © Alle Rechte vorbehalten. Nutzung nur gemaess schriftlicher Vereinbarung erlaubt. / Modifications of product or processes only upon written approval of maxon. © All rights reserved. Use permitted only as agreed in writing.

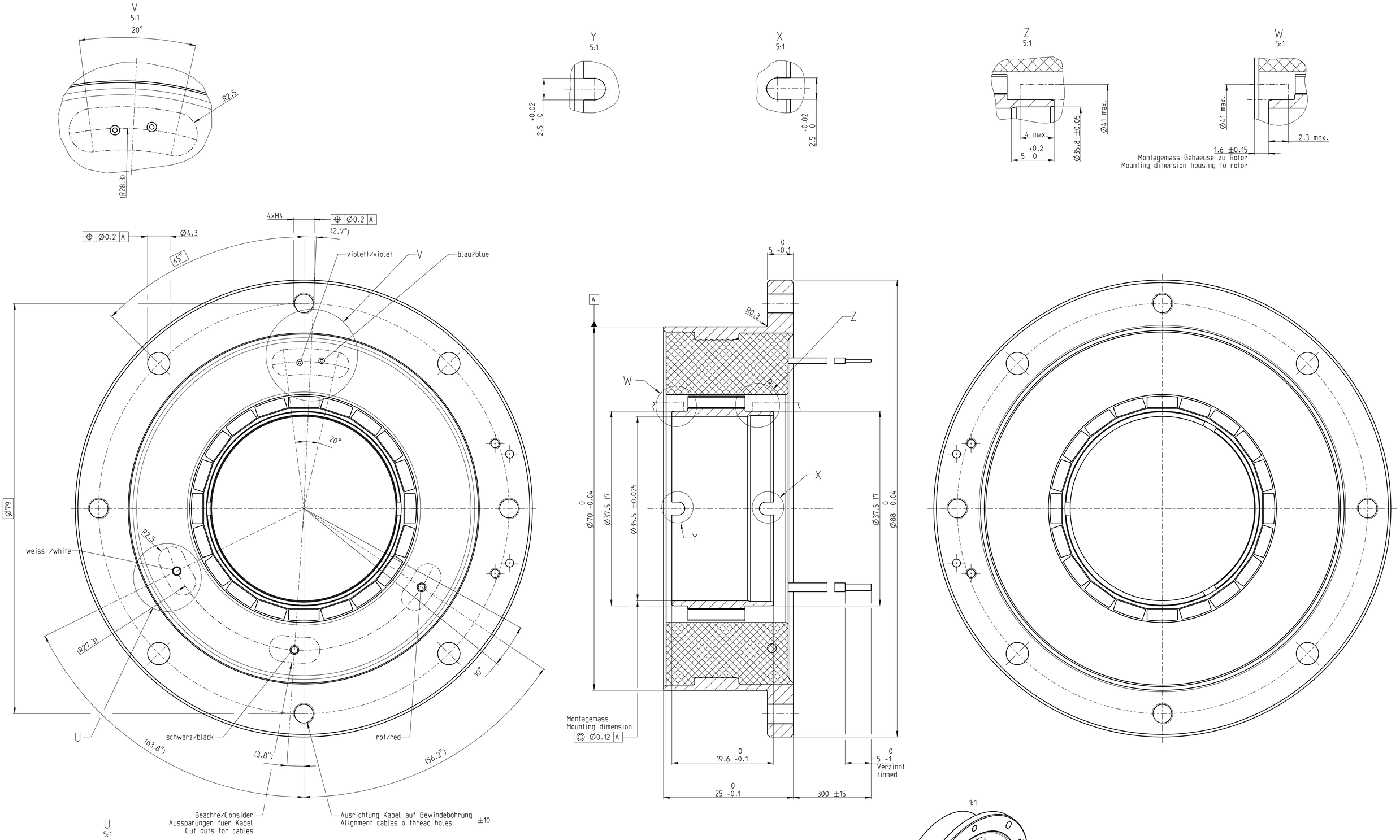

Kabelbelegung / wiring diagram				
AWG18	Kabel cable	=	rot red	Wicklung 1 winding 1
	Kabel cable	=	schwarz black	Wicklung 2 winding 2
	Kabel cable	=	weiss withe	Wicklung 3 winding 3
AWG24	Kabel cable	=	violett violet	NTC in
	Kabel cable	=	blau blue	NTC out

Rotor und Stator werden getrennt angeliefert
Rotor and stator delivered seperated

EC frameless DT65S						
Artikel Nr./part no.	Fertigprodukt/finished product					Basis Nr./basic no.
TOLERANCING: ISO 8015	GENERAL TOLERANCES: ISO 2768:1989-m	SCREW THREAD TOLERANCES: ISO 965-1	GEOMETRICAL TOLERANCES: ISO 1101	SURFACES: N/A	EDGES: N/A	N/A N/A
DOCUMENT TYPE: Dimensional Drawing			CD-NO. 130936	DATE	NAME	SCALE 3:1 / 3D MODEL
TITLE: EC frameless DT65S			CREATED	11.05.2022	MMAGHAAC	SHEETS A1/1/1 / 9112533
			MODIFIED	02.02.2023	MMAGRENI	DIMENSION UNITS mm / PROJECTION METHOD ISO 5456-1
			RELEASED	02.02.2023	MMAGMUAG	
PART NUMBER		PART REVISION	DOCUMENT NUMBER 9112534			DOC REVISION 05
maxon			www.maxongroup.com			

Aenderungen von Produkt oder Prozessen nur mit spezifischer Freigabe durch maxon. © Alle Rechte vorbehalten. Nutzung nur gemäss spezifischer Vereinbarung erlaubt. / Modifications of product or processes only upon written approval of maxon. © All rights reserved. Use permitted only as agreed in writing.

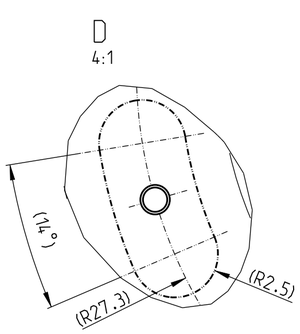

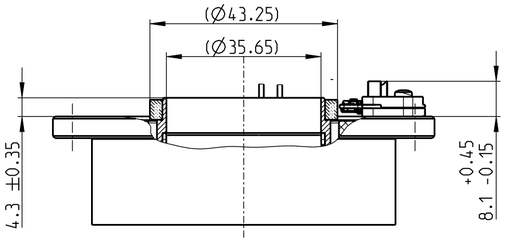

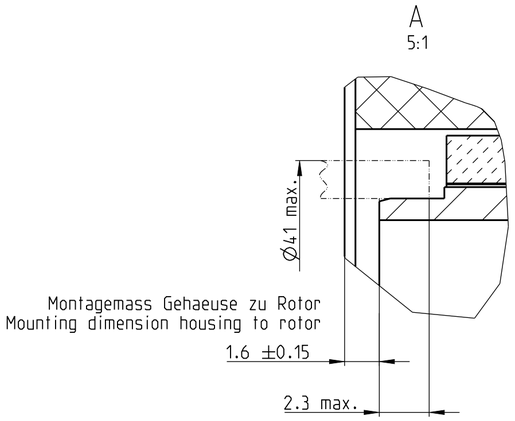

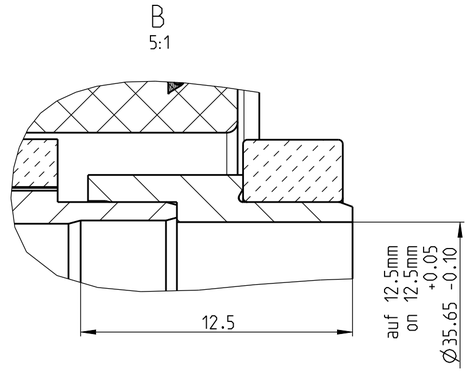

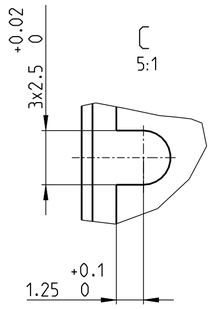

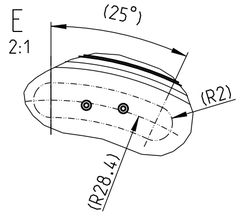

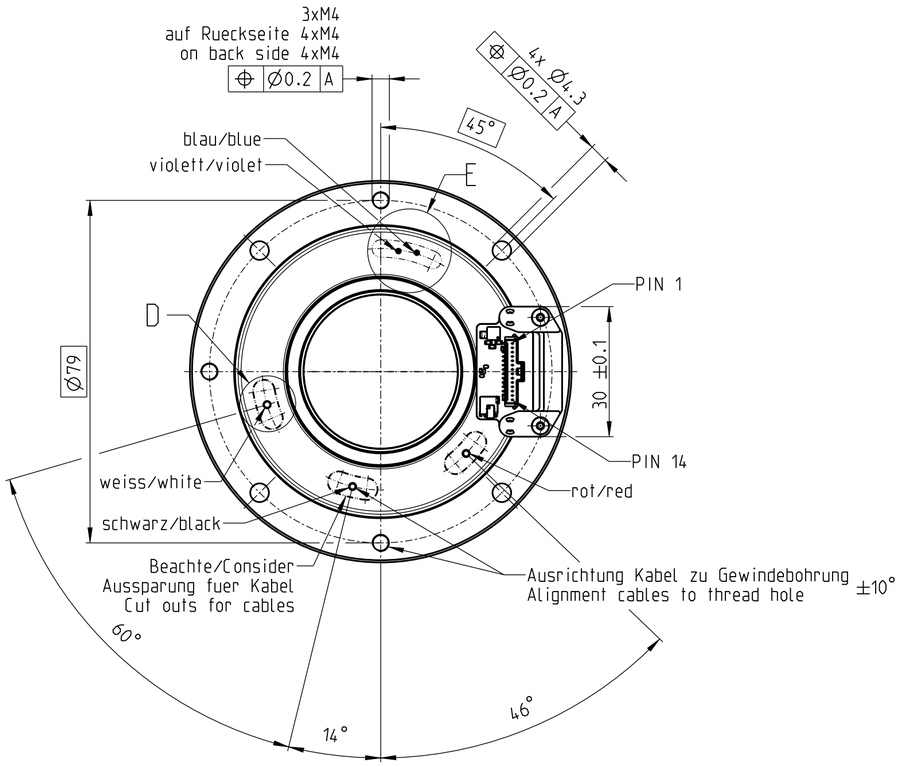

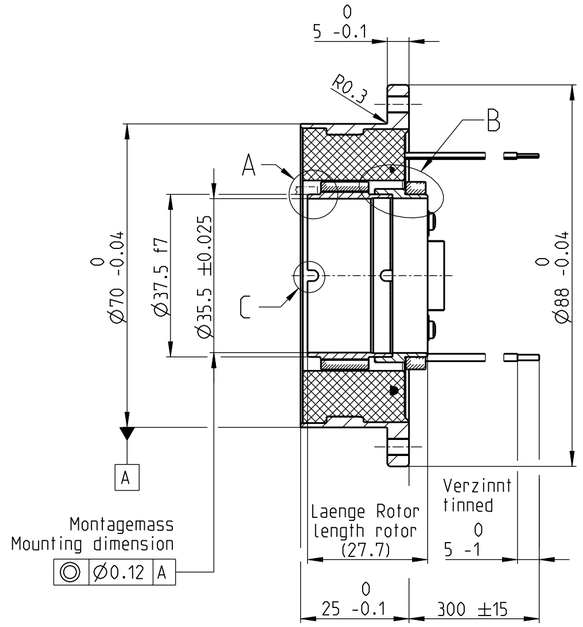

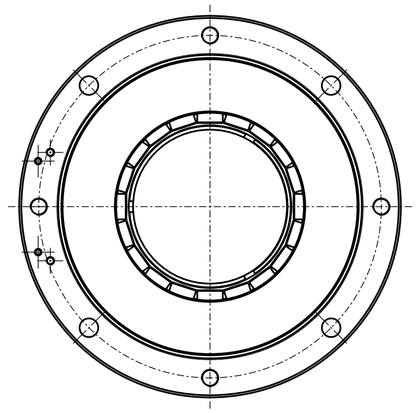

Steckerbelegung Kommutierung + Encoder PIN allocation Commutation + Encoder	
Pin	Signal
PIN 14	Vcc
PIN 13	GND
PIN 12	A/
PIN 11	A
PIN 10	B/
PIN 9	B
PIN 8	N.C.
PIN 7	N.C.
PIN 6	H1
PIN 5	H2
PIN 4	H3
PIN 3	N.C.
PIN 2	NTC+
PIN 1	NTC-

Kabelbelegung/wiring diagram		
AWG16	Kabel rot cable red	= Wicklung 1 = winding 1
AWG16	Kabel schwarz cable black	= Wicklung 2 = winding 2
AWG16	Kabel Kabel cable cable	= Wicklung 3 = winding 3
AWG24	Kabel violett cable violet	= NTC in
AWG24	Kabel blau cable blue	= NTC out

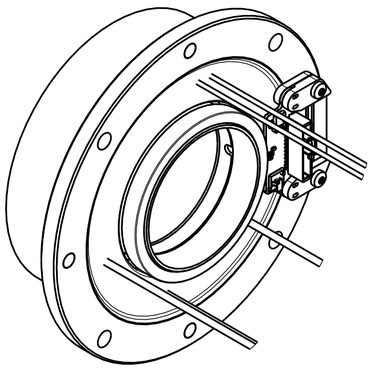

ACHTUNG / ATTENTION

Handhabungsvorschriften und Verpackungsmethoden beachten
observe precautions for handling and packing methods

Elektrostatisch gefaehrdete Bauelemente
electrostatic sensitive devices

Stator und Rotor werden getrennt verpackt und angeliefert.
Stator und Rotor muessen gepaart montiert werden.
Rotor and stator are separeted packed and delivered.
Stator and rotor must assembled paired

maxon tacho ENC TSX MAG
maxon motor EC frameless DT65S

Artikel Nr./part no. | Fertigprodukt/finished product | Basis Nr./basic no.

TOLERANCING	GENERAL TOLERANCES	SCREW THREAD TOLERANCES	GEOMETRICAL TOLERANCES	SURFACES	EDGES	N/A N/A
ISO 8015	ISO 2768:1989-m	ISO 965-1	ISO 1101	N/A	N/A	N/A

DOCUMENT TYPE	Dimensional Drawing	CO-ND: 130936	DATE	NAME	SCALE	1:1	3D MODEL
TITLE		CREATED	17.10.2022	MMAGMRHI	SHEETS	A2/1/1	9591458
EC frameless DT65S + TSX MAG		MODIFIED	03.02.2023	MMAGMUAG	DIMENSION UNITS: mm	PROJECTION METHOD: ISO 5456-1	
		RELEASED	03.02.2023	MMAGHAAC			

PART NUMBER	PART REVISION	DOCUMENT NUMBER	DOC REVISION
		9591822	02

maxon | www.maxongroup.com

©2022 maxon. All rights reserved. Any use, in particular reproduction, selling, translation and copying without prior written approval is not permitted (contact: maxon international ltd., Bruenigstrasse 220, CH-6072 Sachseln, +41 41 666 1500, www.maxongroup.com). Infringements will be prosecuted under civil and criminal law. The mentioned trademarks belong to their respective owner and are protected under trademark laws.

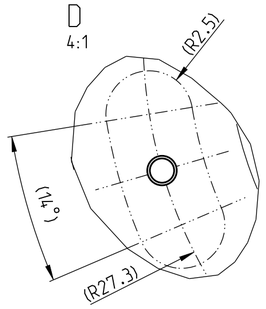

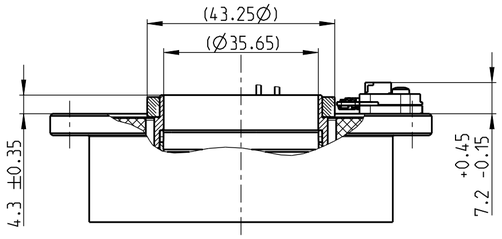

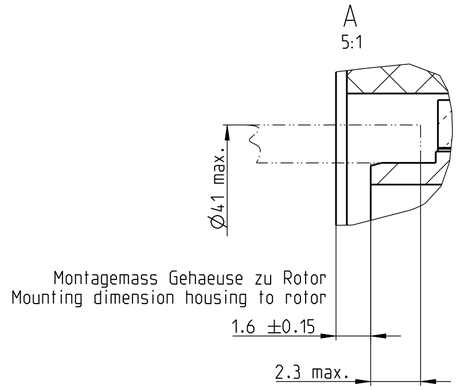

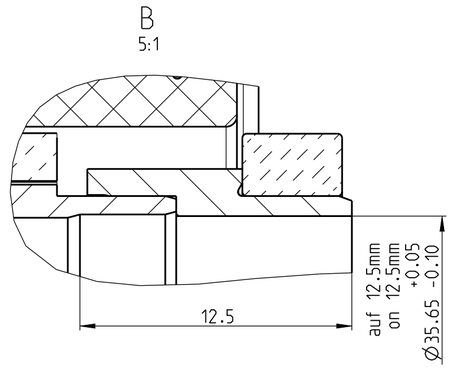

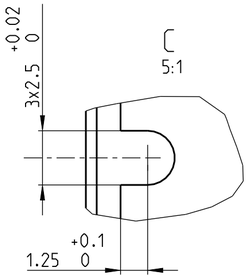

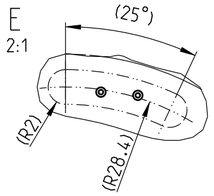

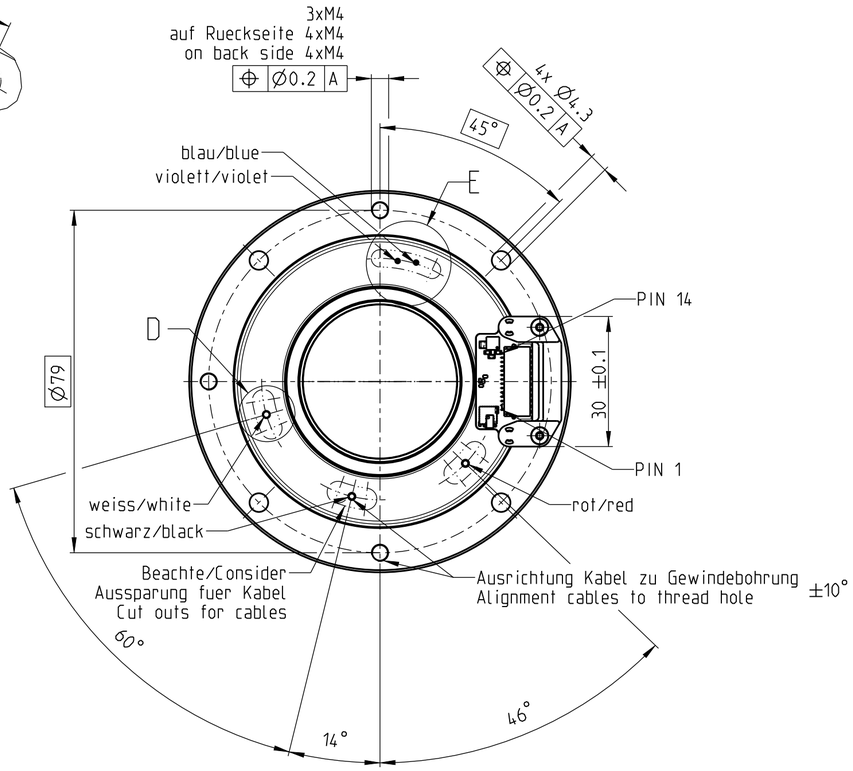

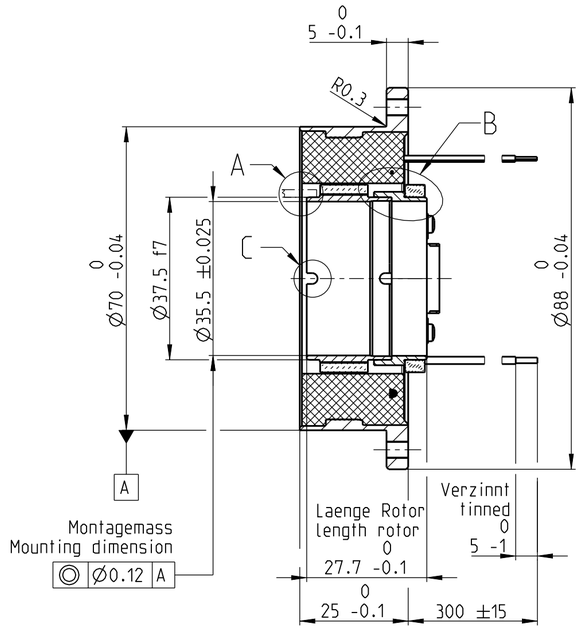

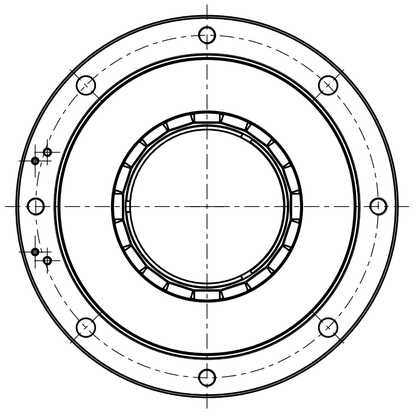

Steckerbelegung Kommutierung + Encoder PIN allocation Commutation + Encoder	
Pin	Signal
PIN 1	Vcc
PIN 2	GND
PIN 3	A/
PIN 4	A
PIN 5	B/
PIN 6	B
PIN 7	N.C.
PIN 8	N.C.
PIN 9	H1
PIN 10	H2
PIN 11	H3
PIN 12	N.C.
PIN 13	NTC+
PIN 14	NTC-

Kabelbelegung/wiring diagram		
AWG16	Kabel rot cable red	= Wicklung 1 = winding 1
AWG16	Kabel schwarz cable black	= Wicklung 2 = winding 2
AWG16	Kabel Kabel cable cable	= Wicklung 3 = winding 3
AWG24	Kabel violett cable violet	= NTC in
AWG24	Kabel blau cable blue	= NTC out

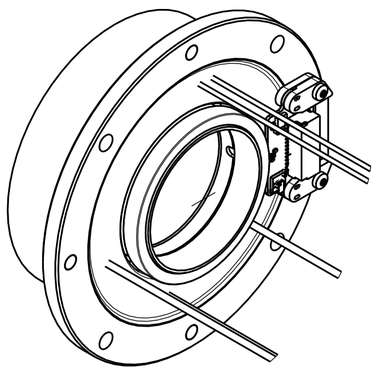

ACHTUNG / ATTENTION

Handhabungsvorschriften und Verpackungsmethoden beachten
observe precautions for handling and packing methods

Elektrostatisch gefaehrdete Bauelemente
electrostatic sensitive devices

Stator und Rotor werden getrennt verpackt und angeliefert.
Stator und Rotor muessen gepaart montiert werden.
Rotor and stator are separeted packed and delivered.
Stator and rotor must assembled paired

maxon tacho ENC TSX MAG maxon motor EC frameless DT65S						
Artikel Nr./part no.	Fertigprodukt/finished product					Basis Nr./basic no.
TOLERANCING: ISO 8015	GENERAL TOLERANCES: ISO 2768:1989-m	SCREW THREAD TOLERANCES: ISO 965-1	GEOMETRICAL TOLERANCES: ISO 1101	SURFACES: N/A	EDGES: N/A	N/A N/A N/A

DOCUMENT TYPE: Dimensional Drawing	CO-NO: 130936	DATE	NAME	SCALE	1:1	3D MODEL
TITLE: EC frameless DT65S + TSX MAG	CREATED	18.10.2022	MMAGMRHI	SHEETS	A2/1/1	9595453
	MODIFIED	03.02.2023	MMAGMUAG	DIMENSION UNITS: mm	PROJECTION METHOD: ISO 5456-1	
	RELEASED	03.02.2023	MMAGHAAC			
PART NUMBER	PART REVISION	DOCUMENT NUMBER: 9595454				DOC REVISION: 02

maxon

www.maxongroup.com

©2022 maxon. All rights reserved. Any use, in particular reproduction, editing, translation and copying without prior written approval is not permitted (contact: maxon international ltd., Brueniglstrasse 220, CH-6072 Sachseln, +41 41 666 1500, www.maxongroup.com). Infringements will be prosecuted under civil and criminal law. The mentioned Trademarks belong to their respective owner and are protected under trademark laws.

Printed: 2023-05-15 16:26:31 Document: 9595454/en/02/Released/Confidential

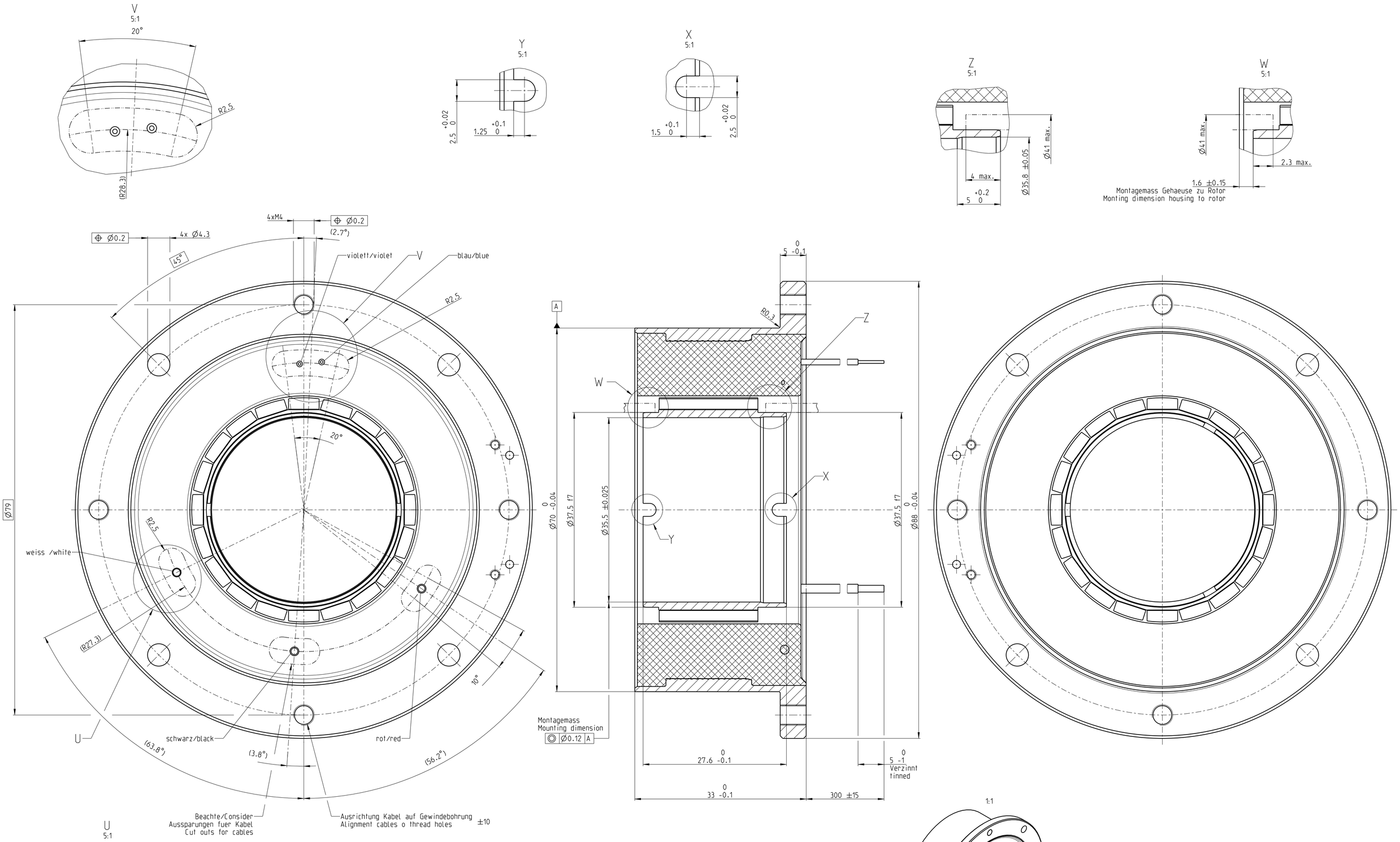

Kabelbelegung / wiring diagram				
AWG18	Kabel cable	=	rot red	Wicklung 1 winding 1
	Kabel cable	=	schwarz black	Wicklung 2 winding 2
	Kabel cable	=	weiss withe	Wicklung 3 winding 3
AWG24	Kabel cable	=	violett violet	NTC in
	Kabel cable	=	blau blue	NTC out

Rotor und Stator werden getrennt angeliefert
Rotor and stator delivered seperated

EC frameless DT65M						
Artikel Nr./part no.	Fertigprodukt/finished product					Basis Nr./basic no.
TOLERANCING: ISO 8015	GENERAL TOLERANCES: ISO 2768:1989-m	SCREW THREAD TOLERANCES: ISO 965-1	GEOMETRICAL TOLERANCES: ISO 1101	SURFACES: N/A	EDGES: N/A	N/A N/A N/A

DOCUMENT TYPE: Dimensional Drawing	CO-NO. 1509106	DATE	NAME	SCALE: 3:1		3D MODEL
TITLE: EC frameless DT65M	CREATED	18.05.2022	MMAGHAAC	SHEETS: A1/1/1		9129709
	MODIFIED	02.02.2023	MMAGMUAG	DIMENSION UNITS: mm	PROJECTION METHOD: ISO 5456-1	
	RELEASED	02.02.2023	MMAGMUAG			
PART NUMBER	PART REVISION	DOCUMENT NUMBER: 9129711				DOC REVISION: 03
maxon		www.maxongroup.com				

Aenderungen von Produkt oder Prozessen nur mit schriftlicher Freigabe durch maxon. © Alle Rechte vorbehalten. Nutzung zur gewerbl. schriftlicher Verwendung erlaubt. / Modifications of product or processes only upon written approval of maxon. © All rights reserved. Use permitted only as agreed in writing.

Printed: 2023-05-15 16:17:45 Document: 9129711/en/03/Released/Confidential

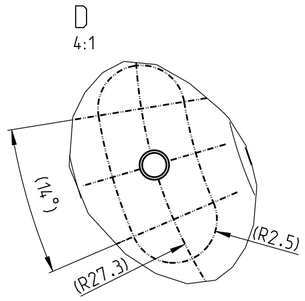

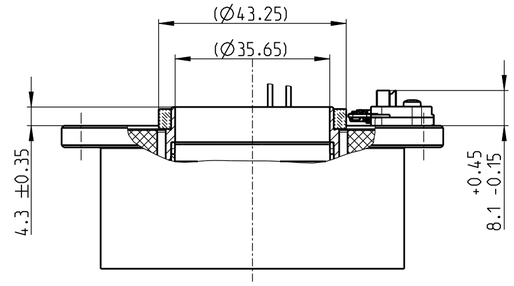

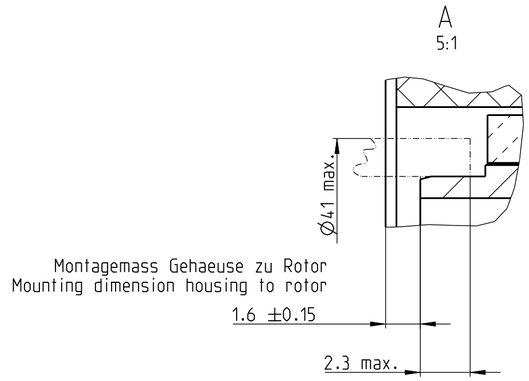

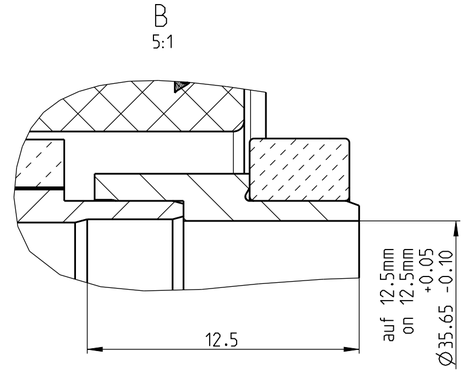

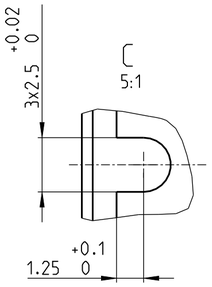

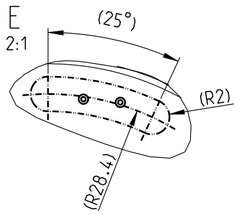

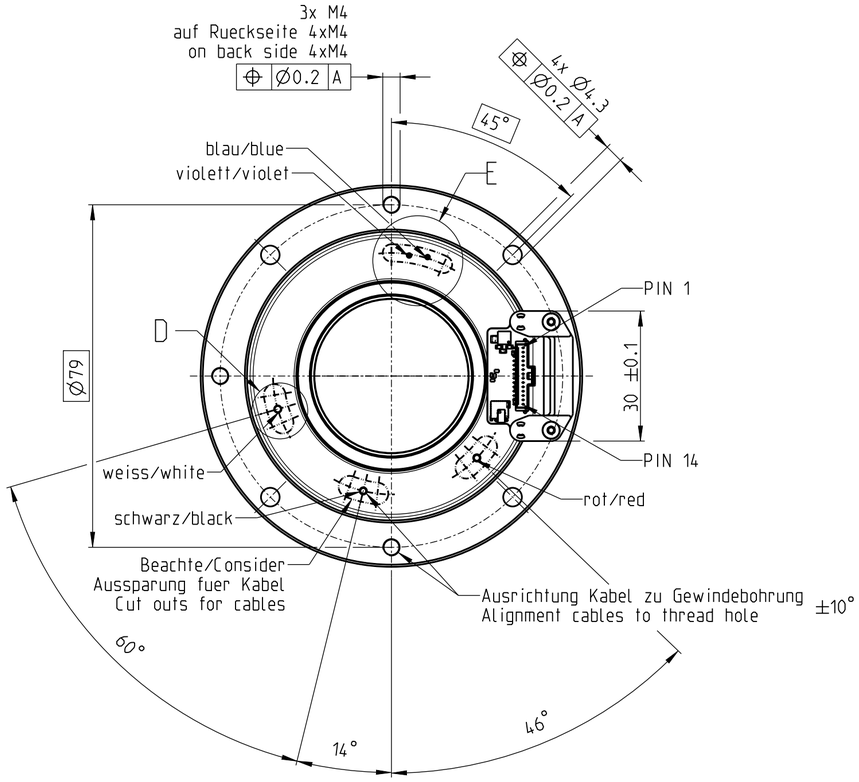

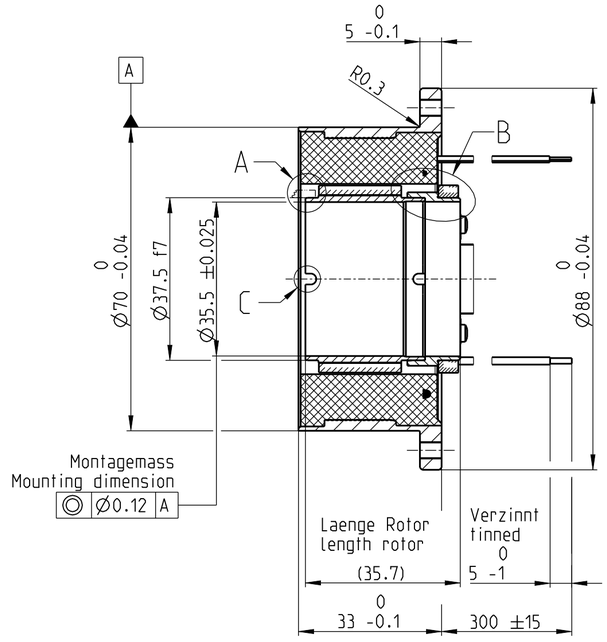

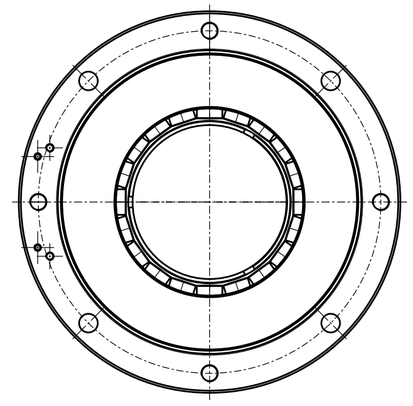

Steckerbelegung Kommutierung + Encoder PIN allocation Commutation + Encoder	
Pin	Signal
PIN 14	Vcc
PIN 13	GND
PIN 12	A/
PIN 11	A
PIN 10	B/
PIN 9	B
PIN 8	N.C.
PIN 7	N.C.
PIN 6	H1
PIN 5	H2
PIN 4	H3
PIN 3	N.C.
PIN 2	NTC+
PIN 1	NTC-

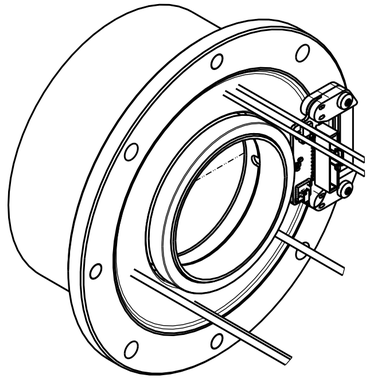

Kabelbelegung/wiring diagram		
AWG16	Kabel rot cable red	= Wicklung 1 = winding 1
AWG16	Kabel schwarz cable black	= Wicklung 2 = winding 2
AWG16	Kabel Kabel cable cable	= Wicklung 3 = winding 3
AWG24	Kabel violett cable violet	= NTC in
AWG24	Kabel blau cable blue	= NTC out

ACHTUNG / ATTENTION

Handhabungsvorschriften und Verpackungsmethoden beachten
observe precautions for handling and packing methods

Elektrostatisch gefaehrdete Bauelemente
electrostatic sensitive devices

Stator und Rotor werden getrennt verpackt und angeliefert.
Stator und Rotor muessen gepaart montiert werden.
Rotor and stator are separeted packed and delivered.
Stator and rotor must assembled paired

maxon tacho ENC TSX MAG
maxon motor EC frameless DT65M

Artikel Nr./part no. | Fertigprodukt/finished product | Basis Nr./basic no.

TOLERANCING	GENERAL TOLERANCES	SCREW THREAD TOLERANCES	GEOMETRICAL TOLERANCES	SURFACES	EDGES	N/A N/A
ISO 8015	ISO 2768:1989-m	ISO 965-1	ISO 1101	N/A	N/A	N/A

DOCUMENT TYPE	Dimensional Drawing	CO-ND: 130936	DATE	NAME	SCALE	1:1	3D MODEL
TITLE		CREATED	18.10.2022	MMAGMRHI	SHEETS	A2/1/1	9595762
EC frameless DT65M + TSX MAG		MODIFIED	03.02.2023	MMAGMUAG	DIMENSION UNITS	PROJECTION METHOD	
		RELEASED	03.02.2023	MMAGHAAC	mm	ISO 5456-1	

PART NUMBER	PART REVISION	DOCUMENT NUMBER	DOC REVISION
		9595763	02

maxon | www.maxongroup.com

©2022 maxon. All rights reserved. Any use, in particular reproduction, editing, translation and copying without prior written approval is not permitted (contact: maxon international ltd., Brueningstrasse 220, CH-6072 Sachseln, +41 41 666 1500, www.maxongroup.com). Infringements will be prosecuted under civil and criminal law. The mentioned trademarks belong to their respective owner and are protected under trademark laws.

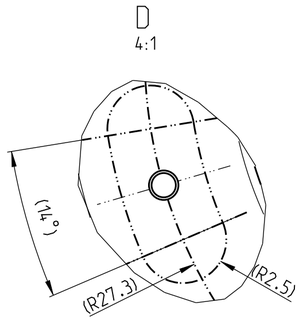

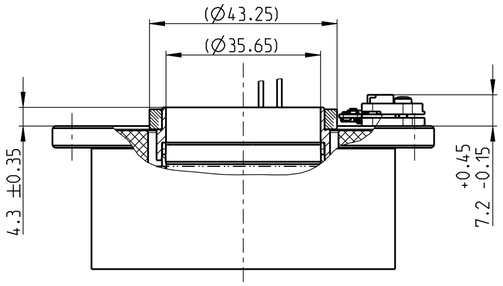

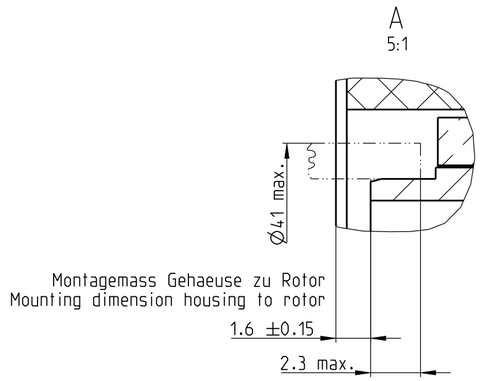

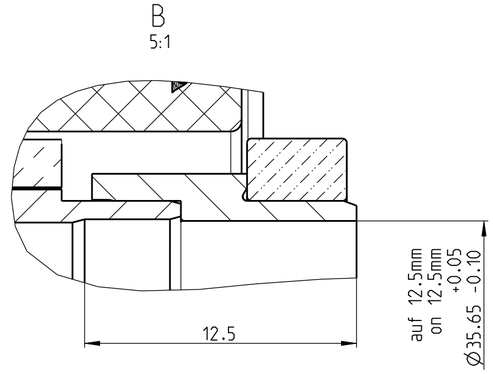

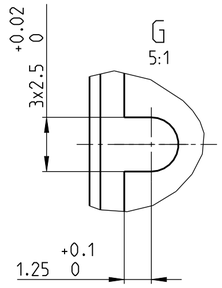

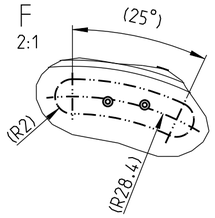

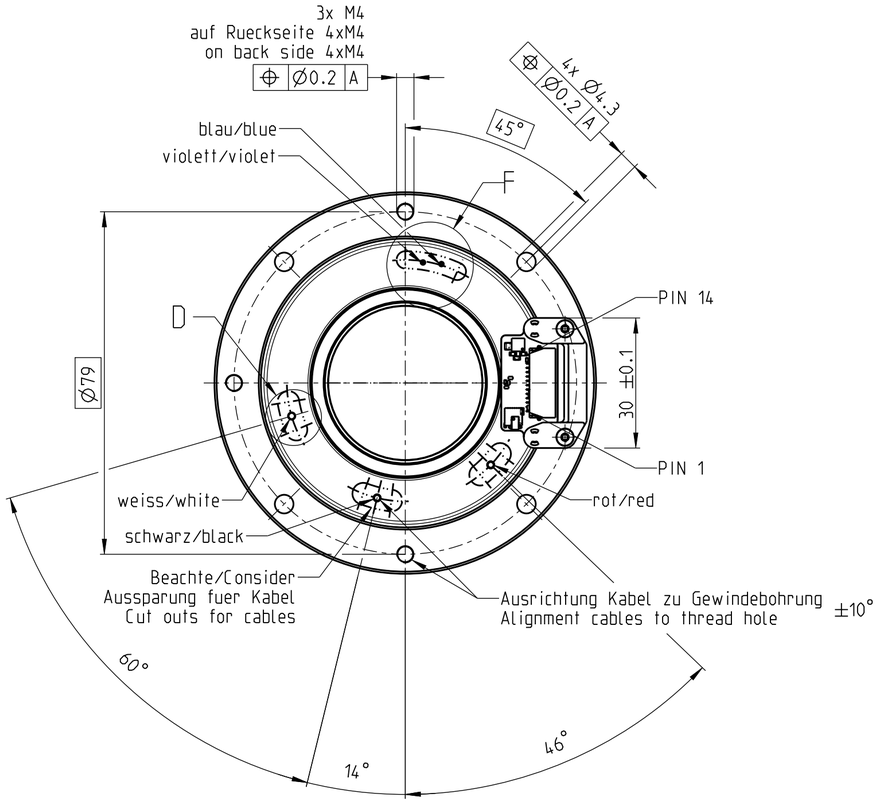

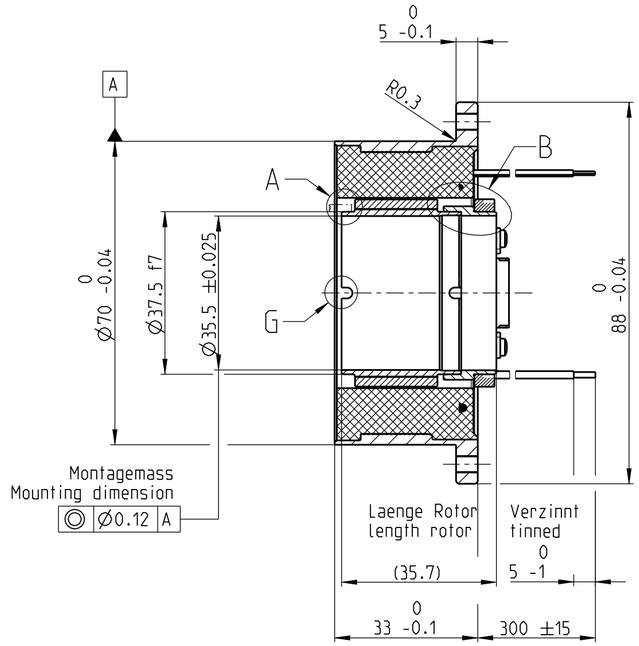

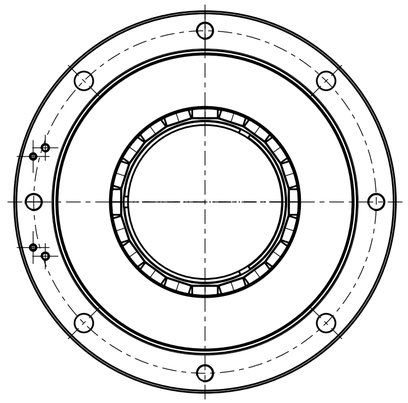

Steckerbelegung Kommutierung + Encoder PIN allocation Commutation + Encoder	
Pin	Signal
PIN 1	Vcc
PIN 2	GND
PIN 3	A/
PIN 4	A
PIN 5	B/
PIN 6	B
PIN 7	N.C.
PIN 8	N.C.
PIN 9	H1
PIN 10	H2
PIN 11	H3
PIN 12	N.C.
PIN 13	NTC+
PIN 14	NTC-

Kabelbelegung/wiring diagram		
AWG16	Kabel rot cable red	= Wicklung 1 = winding 1
AWG16	Kabel schwarz cable black	= Wicklung 2 = winding 2
AWG16	Kabel Kabel cable cable	= Wicklung 3 = winding 3
AWG24	Kabel violett cable violet	= NTC in
AWG24	Kabel blau cable blue	= NTC out

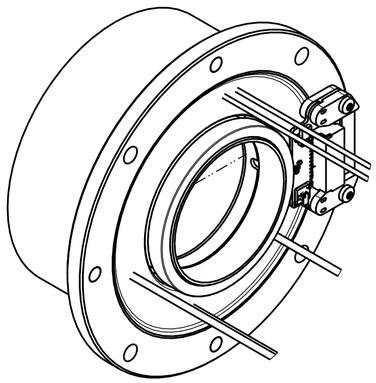

ACHTUNG / ATTENTION

Handhabungsvorschriften und Verpackungsmethoden beachten
observe precautions for handling and packing methods

Elektrostatisch gefaehrdete Bauelemente
electrostatic sensitive devices

Stator und Rotor werden getrennt verpackt und angeliefert.
Stator und Rotor muessen gepaart montiert werden.
Rotor and stator are separeted packed and delivered.
Stator and rotor must assembled paired

	maxon tacho ENC TSX MAG					
	maxon motor EC frameless DT65M					
Artikel Nr./part no.	Fertigprodukt/finished product					Basis Nr./basic no.
TOLERANCING: ISO 8015	GENERAL TOLERANCES: ISO 2768:1989-m	SCREW THREAD TOLERANCES: ISO 965-1	GEOMETRICAL TOLERANCES: ISO 1101	SURFACES: N/A	EDGES: N/A	N/A N/A: N/A

DOCUMENT TYPE: Dimensional Drawing	CO-ND: 130936	DATE	NAME	SCALE	1:1	3D MODEL	
TITLE: EC frameless DT65M + TSX MAG	CREATED	18.10.2022	MMAGMRHI	SHEETS	A2/1/1	9596765	
	MODIFIED	03.02.2023	MMAGMUAG	DIMENSION UNITS: mm	PROJECTION METHOD: ISO 5456-1		
	RELEASED	03.02.2023	MMAGHAAC				
PART NUMBER	PART REVISION	DOCUMENT NUMBER: 9596764				DOC REVISION: 02	

maxon www.maxongroup.com

© 2022 maxon. All rights reserved. Any use, in particular reproduction, editing, translation and copying without prior written approval is not permitted (contact: maxon international ltd., Brueningstrasse 220, CH-6072 Sachseln, +41 41 666 1500, www.maxongroup.com). Infringements will be prosecuted under civil and criminal law. The mentioned trademarks belong to their respective owner and are protected under trademark laws.

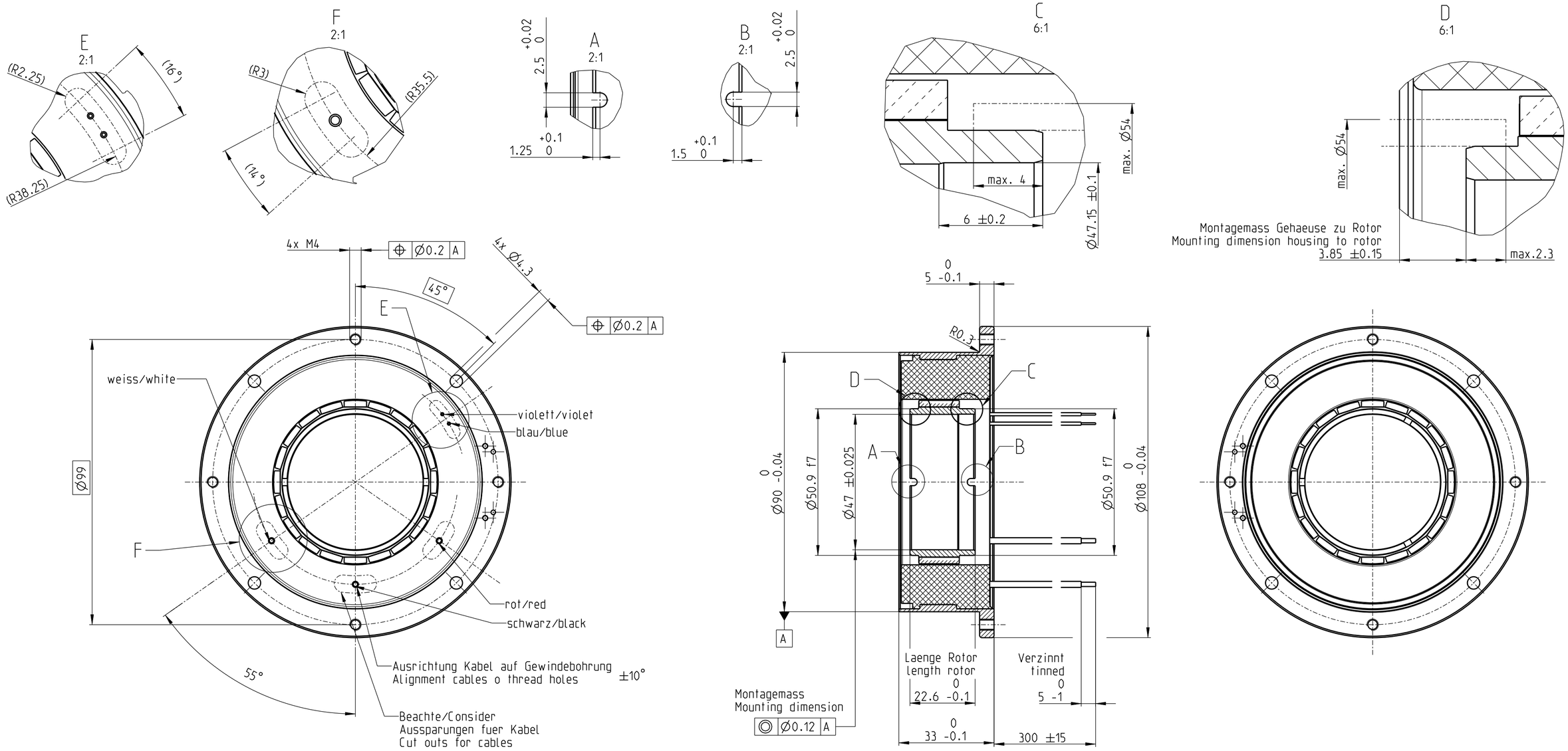

Kabelbelegung/wiring diagram		
AWG16	Kabel rot cable red	= Wicklung 1 = winding 1
AWG16	Kabel schwarz cable black	= Wicklung 2 = winding 2
AWG16	Kabel weiss cable white	= Wicklung 3 = winding 3
AWG24	Kabel violett cable violet	= NTC in
AWG24	Kabel blau cable blue	= NTC out

Rotor und Stator werden getrennt angeliefert
Rotor and stator delivered seperated

TOLERANCING	GENERAL TOLERANCES	SCREW THREAD TOLERANCES	GEOMETRICAL TOLERANCES	SURFACES	EDGES	N/A N/A
ISO 8015	ISO 2768-m	ISO 965-1	ISO 1101	N/A	N/A	N/A

DOCUMENT TYPE	-	CO-ND: A100027410	DATE	NAME	SCALE	1:1	3D MODEL
TITLE EN Dimensional Drawing		CREATED	13.11.2020	MMAGDARR	SHEETS	A2/1/1	7460523
TITLE DE EC frameless DT85M		MODIFIED	14.07.2022	MMAGMUAG	DIMENSION UNITS mm	PROJECTION METHOD ISO 5456-1	
		RELEASED	18.07.2022	MMAGHAAC			
PART NUMBER	PART REVISION	DOCUMENT NUMBER 7460524					DOC REVISION 05

maxon **www.maxongroup.com**

Aenderungen von Produkt oder Prozessen nur mit schriftlicher Freigabe durch maxon. © Alle Rechte vorbehalten. Nutzung nur gemaess schriftlicher Vereinbarung erlaubt. / Modifications of product or processes only upon written approval of maxon. © All rights reserved. Use permitted only as agreed in writing.

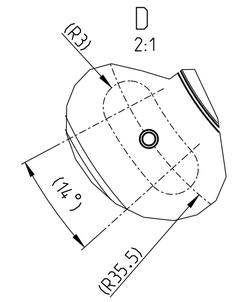

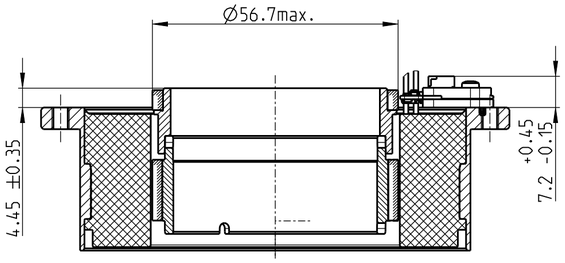

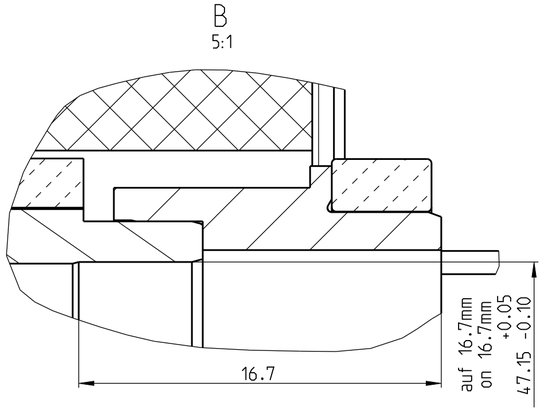

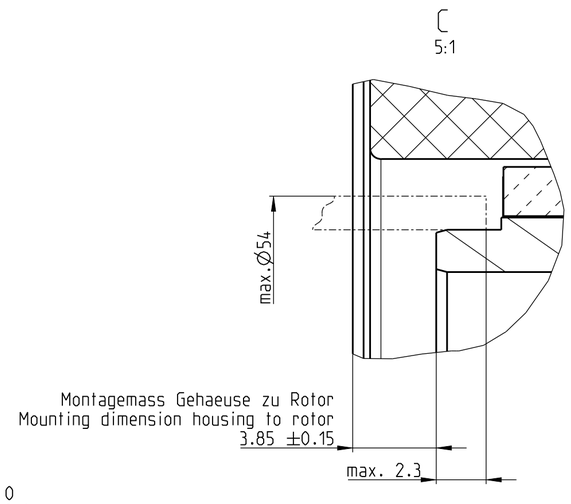

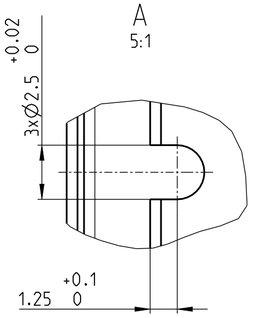

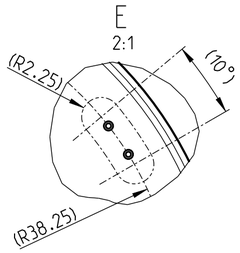

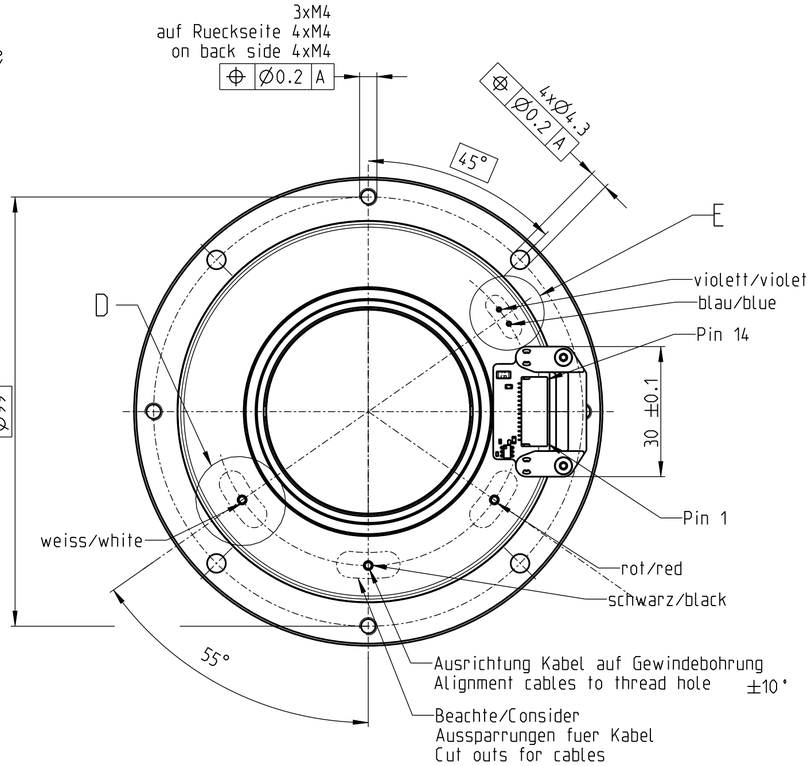

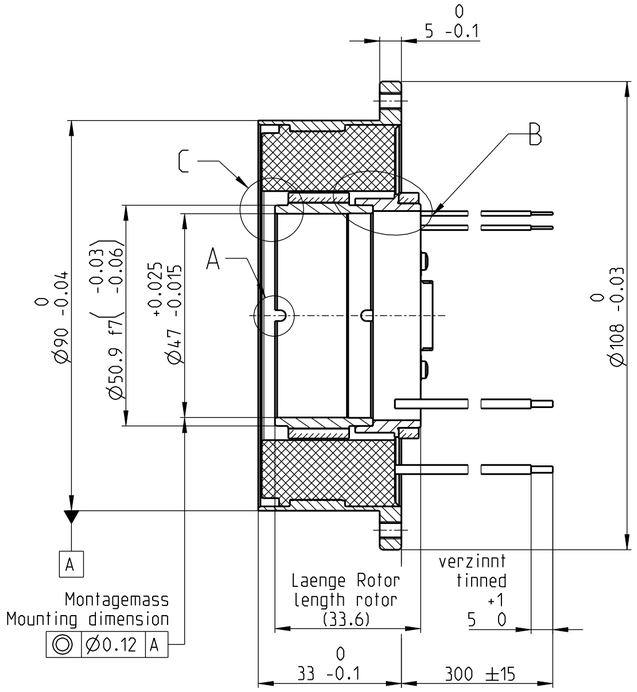

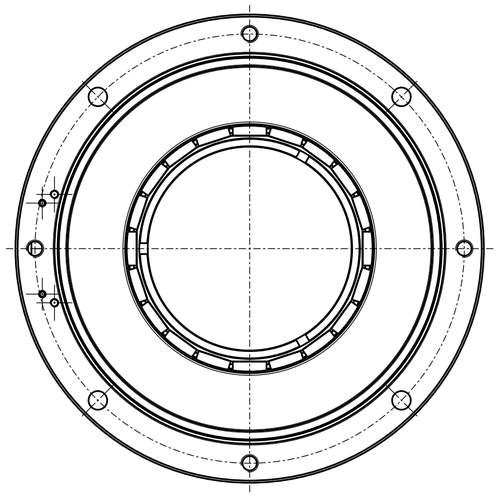

Steckerbelegung Kommutierung + Encoder PIN allocation Commutation + Encoder	
Pin	Signal
PIN 1	Vcc
PIN 2	GND
PIN 3	A/
PIN 4	A
PIN 5	B/
PIN 6	B
PIN 7	N.C.
PIN 8	N.C.
PIN 9	H1
PIN 10	H2
PIN 11	H3
PIN 12	N.C.
PIN 13	NTC+
PIN 14	NTC-

Kabelbelegung/wiring diagram		
AWG16	Kabel rot cable red	= Wicklung 1 = winding 1
AWG16	Kabel schwarz cable black	= Wicklung 2 = winding 2
AWG16	Kabel Kabel cable cable	= Wicklung 3 = winding 3
AWG24	Kabel violett cable violet	= NTC in
AWG24	Kabel blau cable blue	= NTC out

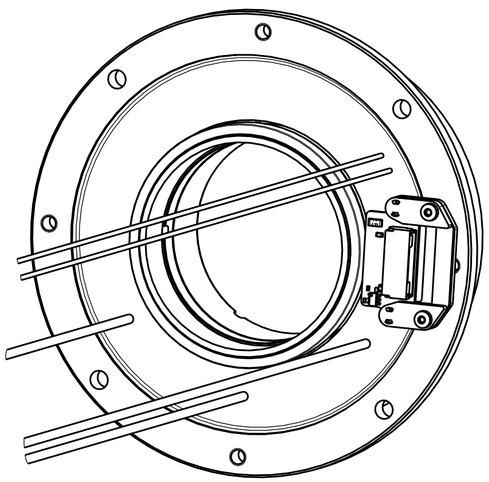

ACHTUNG / ATTENTION

Handhabungsvorschriften und Verpackungsmethoden beachten
observe precautions for handling and packing methods

Elektrostatisch gefaehrdete Bauelemente
electrostatic sensitive devices

Stator und Rotor werden getrennt verpackt und angeliefert.
Stator und Rotor muessen gepaart montiert werden.
Rotor and stator are separeted packed and delivered.
Stator and rotor must assembled paired

N/A	maxon tacho ENC TSX MAG	N/A
N/A	maxon motor EC frameless DT85M	N/A
Artikel Nr./part no.	Fertigprodukt/finished product	Basis Nr./basic no.

TOLERANCING	GENERAL TOLERANCES	SCREW THREAD TOLERANCES	GEOMETRICAL TOLERANCES	SURFACES	EDGES	N/A N/A
ISO 8015	ISO 2768-m	ISO 965-1	N/A	ISO 1302	ISO 13715	N/A

DOCUMENT TYPE	Dimensional Drawing	CO-NO. A100027027	DATE	NAME	SCALE	1:1	3D MODEL
TITLE EN: Dimensional Drawing		CREATED	22.02.2022	MMAGMUAG	SHEETS	A2/1/1	8872144
TITLE DE: EC frameless DT85M+TSX MAG		MODIFIED	18.05.2022	MMAGMUAG	DIMENSION UNITS: mm	PROJECTION METHOD: ISO 5456-1	
		RELEASED	13.07.2022	MMAGMUAG			
PART NUMBER	PART REVISION	DOCUMENT NUMBER: 8885047					DOC REVISION: 03

maxon

www.maxongroup.com

Aenderungen von Produkt oder Prozessen nur mit schriftlicher Freigabe durch maxon. © Alle Rechte vorbehalten. Nutzung nur gemaess schriftlicher Vereinbarung erlaubt. / Modifications of product or processes only upon written approval of maxon. © All rights reserved. Use permitted only as agreed in writing.

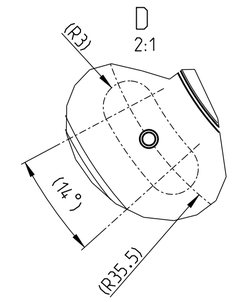

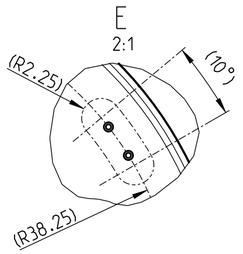

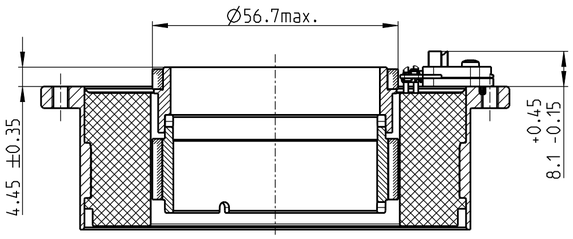

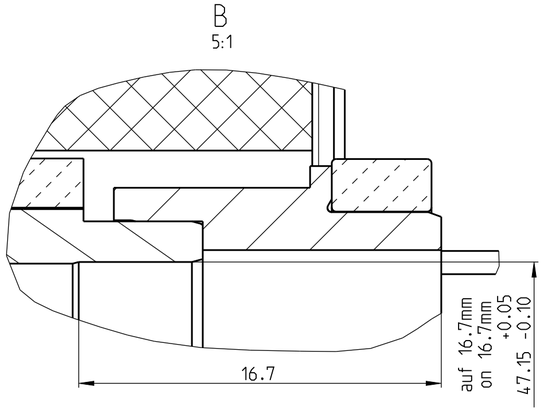

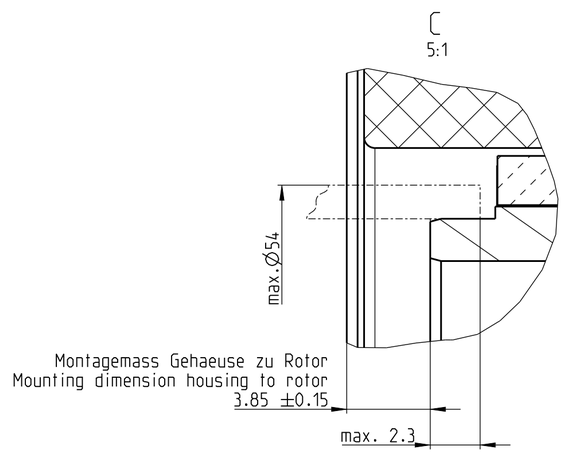

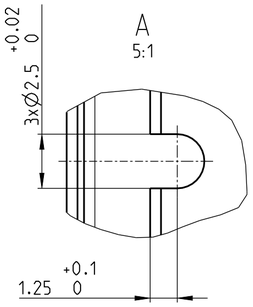

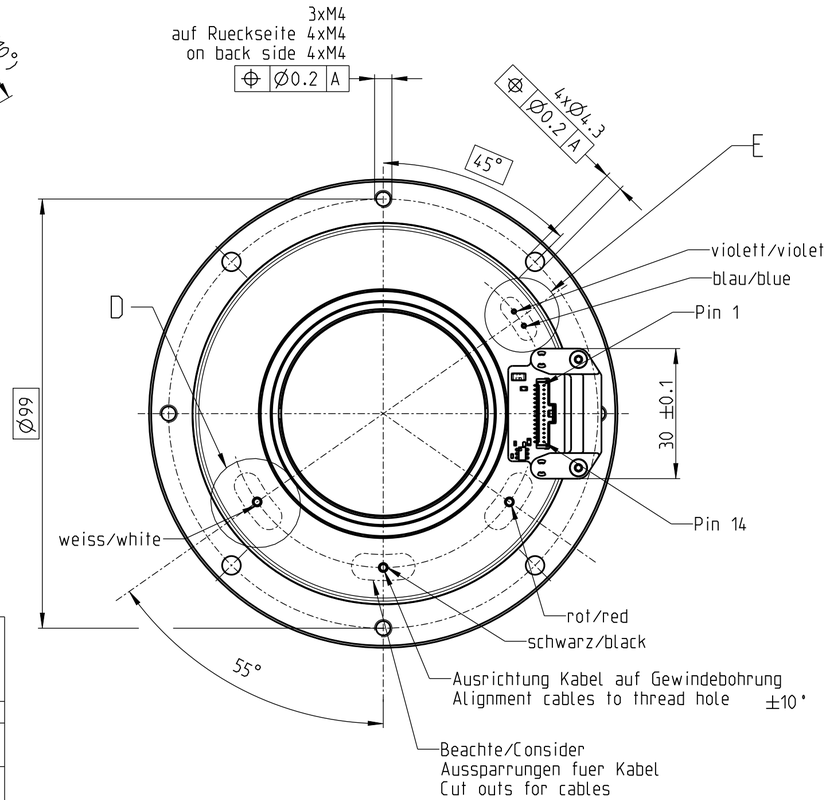

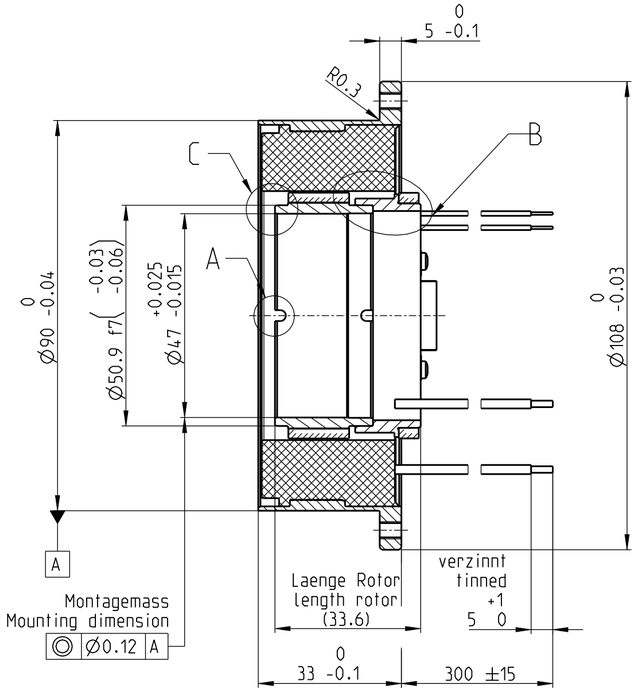

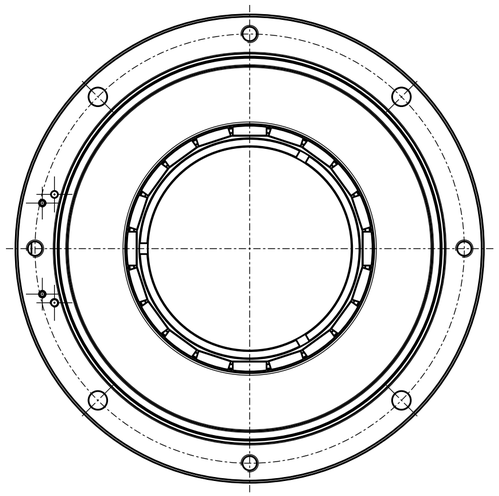

Steckerbelegung Kommutierung + Encoder PIN allocation Commutation + Encoder	
Pin	Signal
PIN 14	Vcc
PIN 13	GND
PIN 12	A/
PIN 11	A
PIN 10	B/
PIN 9	B
PIN 8	N.C.
PIN 7	N.C.
PIN 6	H1
PIN 5	H2
PIN 4	H3
PIN 3	N.C.
PIN 2	NTC+
PIN 1	NTC-

Kabelbelegung/wiring diagram		
AWG16	Kabel rot cable red	= Wicklung 1 = winding 1
AWG16	Kabel schwarz cable black	= Wicklung 2 = winding 2
AWG16	Kabel Kabel cable cable	= Wicklung 3 = winding 3
AWG24	Kabel violett cable violet	= NTC in
AWG24	Kabel blau cable blue	= NTC out

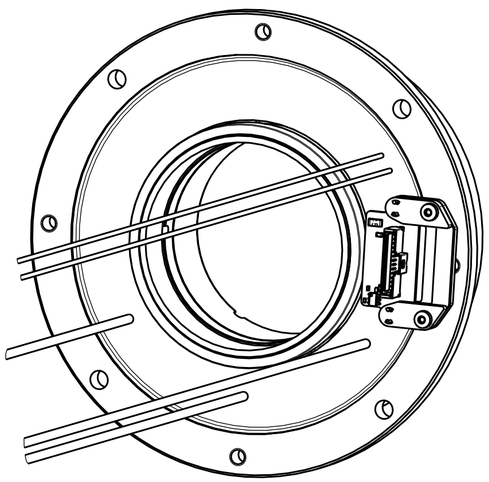

ACHTUNG / ATTENTION

Handhabungsvorschriften und Verpackungsmethoden beachten
observe precautions for handling and packing methods

Elektrostatisch gefaehrdete Bauelemente
electrostatic sensitive devices

Stator und Rotor werden getrennt verpackt und angeliefert.
Stator und Rotor muessen gepaart montiert werden.
Rotor and stator are separeted packed and delivered.
Stator and rotor must assembled paired

N/A	maxon tacho ENC TSX MAG	N/A
N/A	maxon motor EC frameless DT85M	N/A
Artikel Nr./part no.	Fertigprodukt/finished product	Basis Nr./basic no.

TOLERANCING	GENERAL TOLERANCES	SCREW THREAD TOLERANCES	GEOMETRICAL TOLERANCES	SURFACES	EDGES	N/A N/A
ISO 8015	ISO 2768-m	ISO 965-1	N/A	ISO 1302	ISO 13715	N/A

DOCUMENT TYPE	Dimensional Drawing	CO-NO. A100027027	DATE	NAME	SCALE	1:1	3D MODEL
TITLE EN: Dimensional Drawing		CREATED	30.06.2021	MMAGMUAG	SHEETS	A2/1/1	8872144
TITLE DE: Massbild		MODIFIED	19.05.2022	MMAGMUAG	DIMENSION UNITS: mm	PROJECTION METHOD: ISO 5456-1	
		RELEASED	19.05.2022	MMAGMUAG			
PART NUMBER	PART REVISION	DOCUMENT NUMBER: 8140732					DOC REVISION: 03

maxon

www.maxongroup.com

Aenderungen von Produkt oder Prozessen nur mit schriftlicher Freigabe durch maxon. © Alle Rechte vorbehalten. Nutzung nur gemaess schriftlicher Vereinbarung erlaubt. / Modifications of product or processes only upon written approval of maxon. © All rights reserved. Use permitted only as agreed in writing.

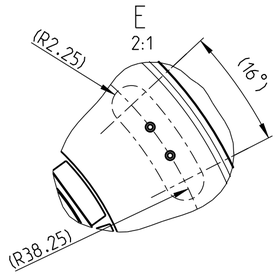

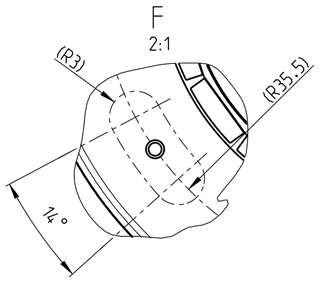

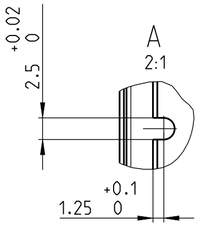

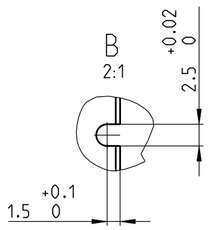

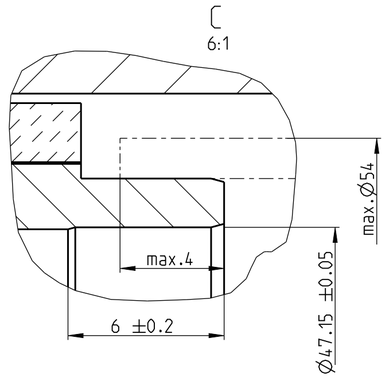

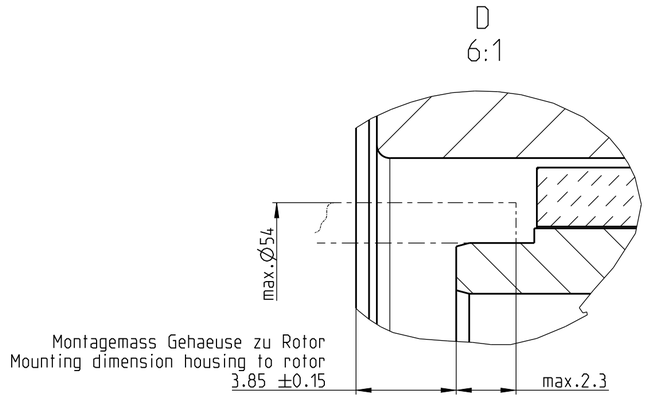

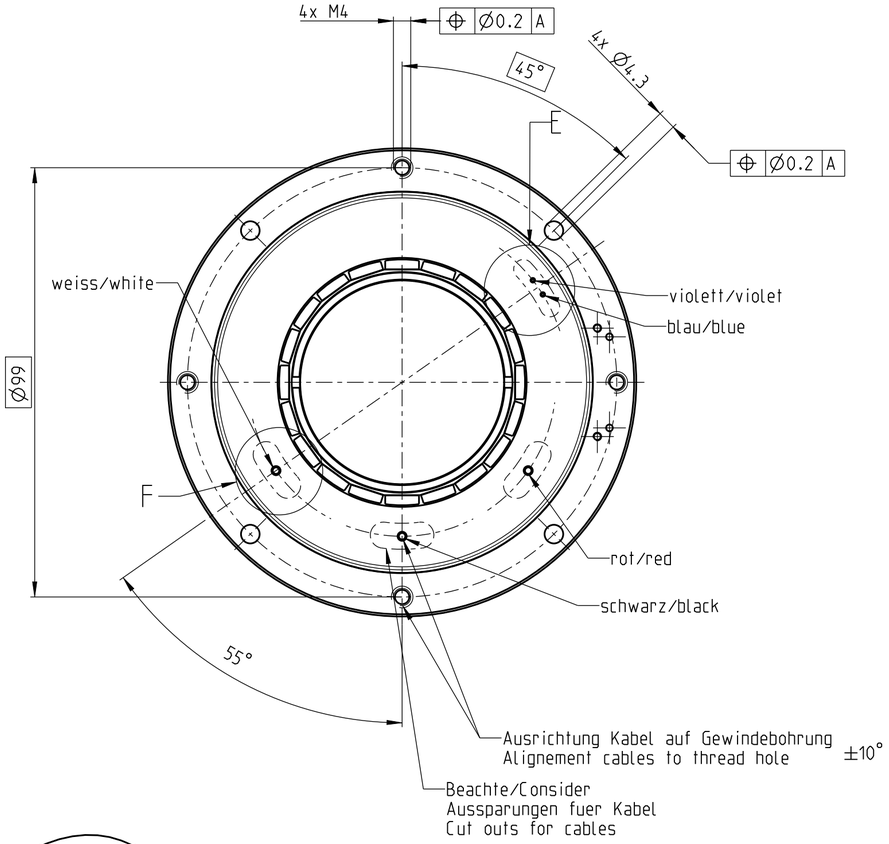

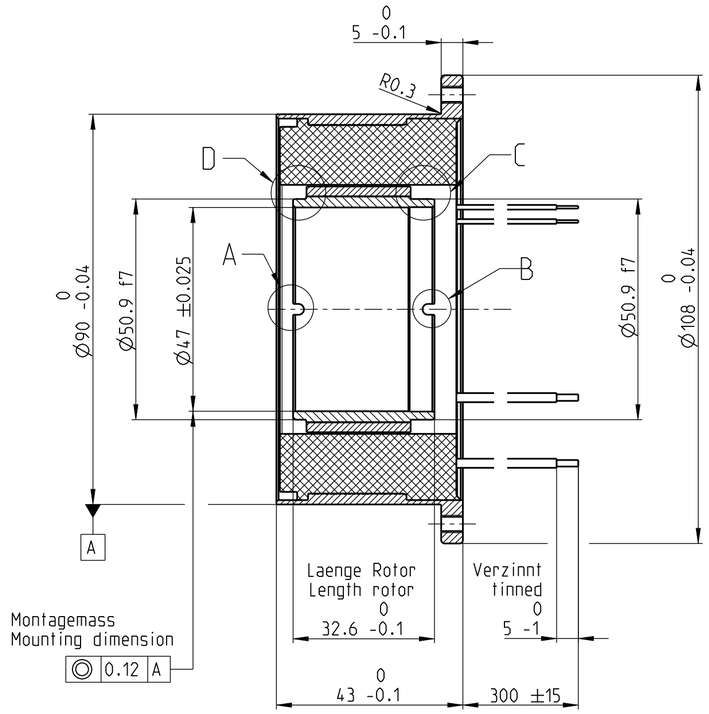

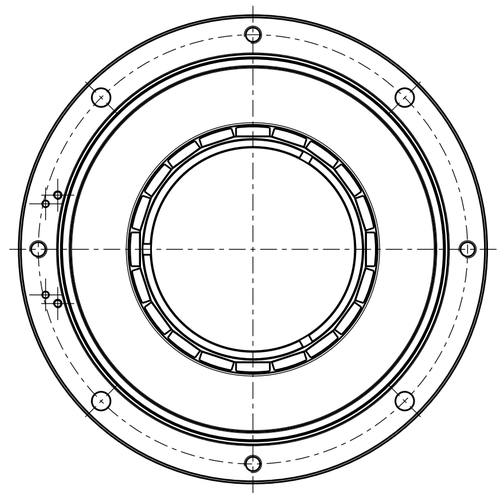

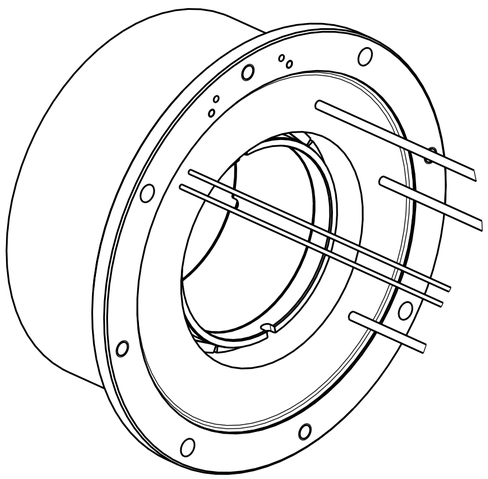

Kabelbelegung/wiring diagram		
AWG16	Kabel rot cable red	= Wicklung 1 = winding 1
AWG16	Kabel schwarz cable black	= Wicklung 2 = winding 2
AWG16	Kabel weiss cable white	= Wicklung 3 = winding 3
AWG24	Kabel violett cable violet	= NTC in
AWG24	Kabel blau cable blue	= NTC out

Rotor und Stator werden getrennt angeliefert
Rotor and stator delivered seperated

TOLERANCING	GENERAL TOLERANCES	SCREW THREAD TOLERANCES	GEOMETRICAL TOLERANCES	SURFACES	EDGES	N/A N/A
ISO 8015	ISO 2768-m	ISO 965-1	ISO 1101	N/A	N/A	N/A

DOCUMENT TYPE	-	CO-ND: A100027410	DATE	NAME	SCALE	1:1	3D MODEL
TITLE EN Dimensional Drawing		CREATED	06.11.2021	MMAGMUAG	SHEETS	A2/1/1	8591561
TITLE DE EC frameless DT85L		MODIFIED	13.07.2022	MMAGMUAG	DIMENSION UNITS mm	PROJECTION METHOD ISO 5456-1	
		RELEASED	18.07.2022	MMAGHAAC			
PART NUMBER	PART REVISION	DOCUMENT NUMBER 8591562					DOC REVISION 03

maxon | **www.maxongroup.com**

Aenderungen von Produkt oder Prozessen nur mit schriftlicher Freigabe durch maxon. © Alle Rechte vorbehalten. Nutzung nur gemaess schriftlicher Vereinbarung erlaubt. / Modifications of product or processes only upon written approval of maxon. © All rights reserved. Use permitted only as agreed in writing.

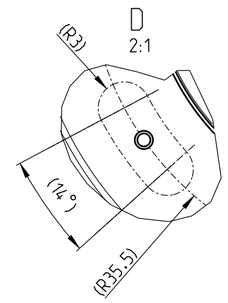

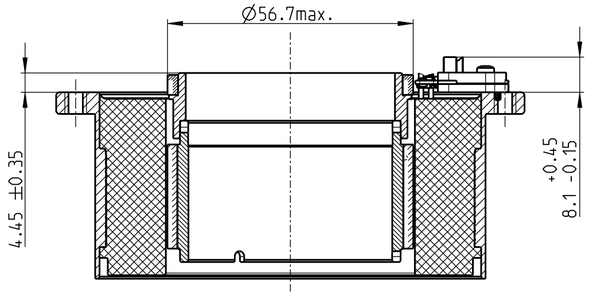

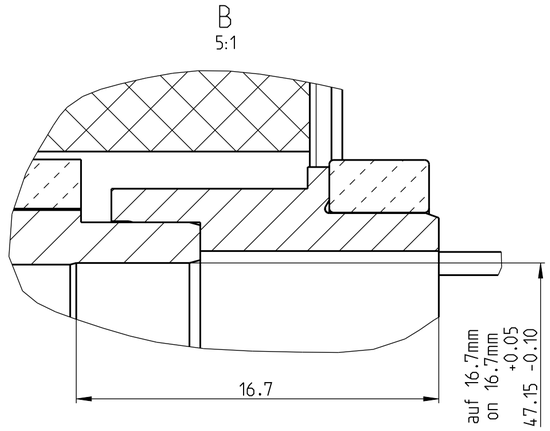

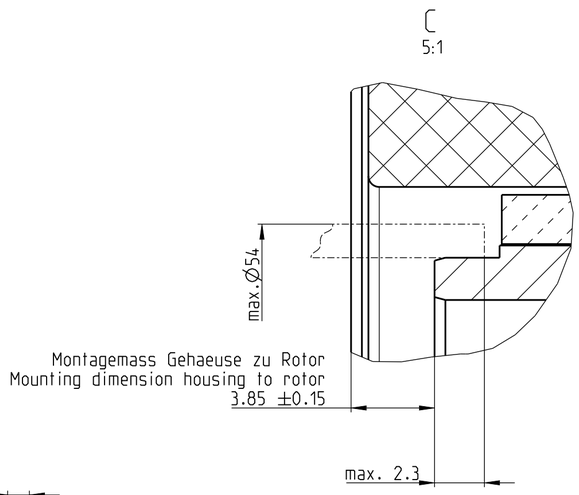

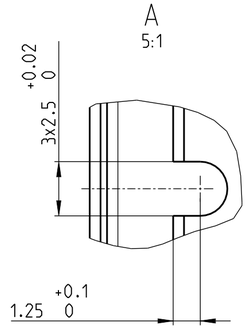

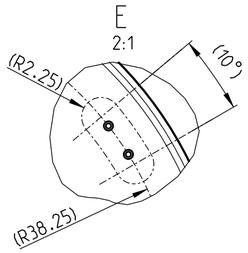

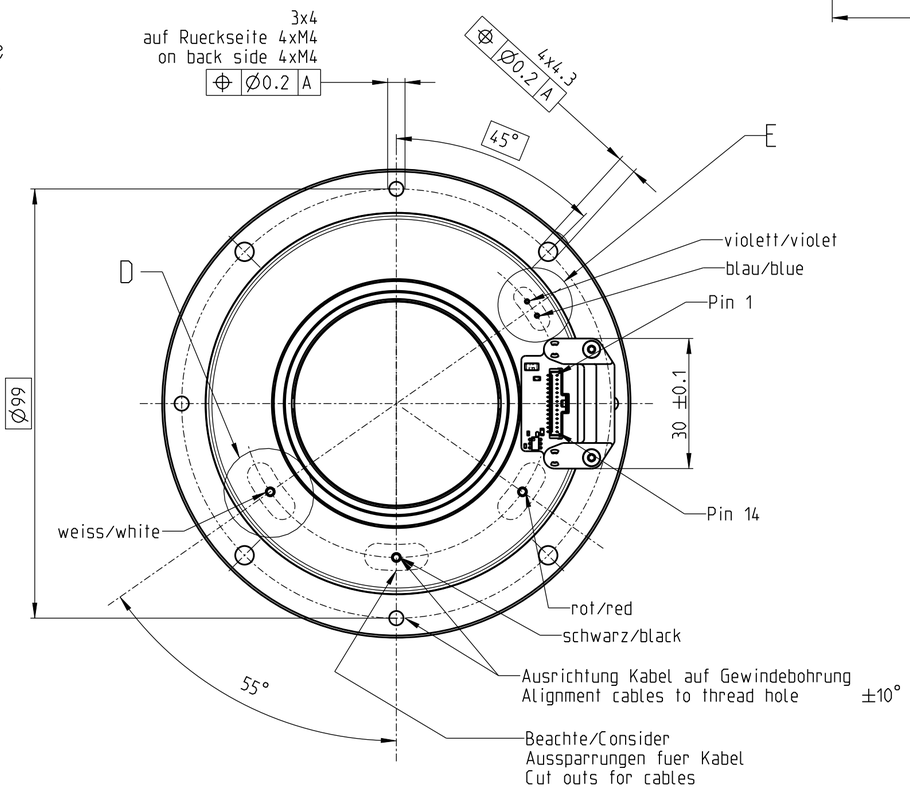

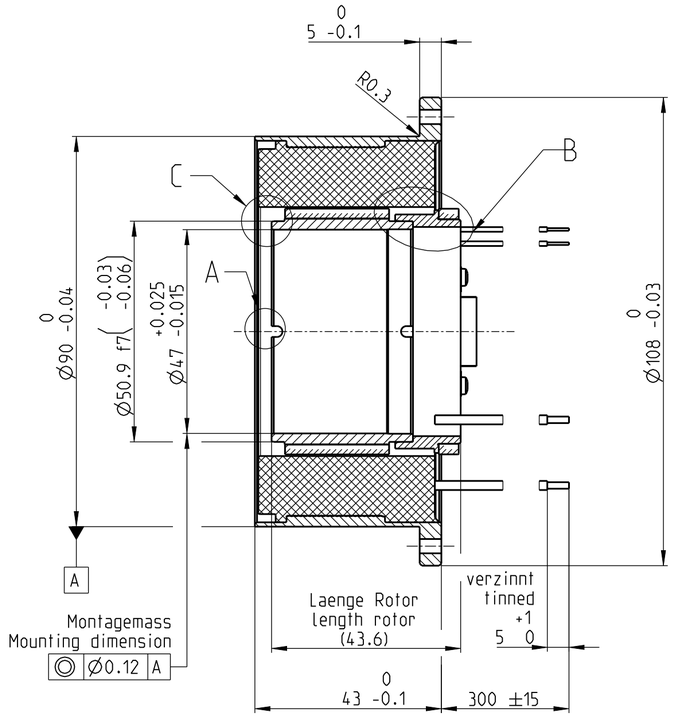

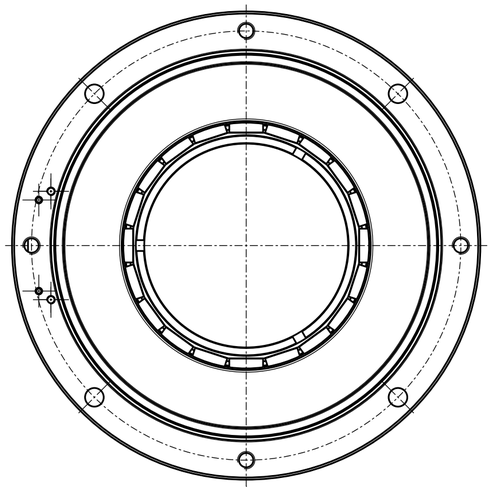

Steckerbelegung Kommutierung + Encoder PIN allocation Commutation + Encoder	
Pin	Signal
PIN 14	Vcc
PIN 13	GND
PIN 12	A/
PIN 11	A
PIN 10	B/
PIN 9	B
PIN 8	N.C.
PIN 7	N.C.
PIN 6	H1
PIN 5	H2
PIN 4	H3
PIN 3	N.C.
PIN 2	NTC+
PIN 1	NTC-

Kabelbelegung/wiring diagram		
AWG16	Kabel rot cable red	= Wicklung 1 = winding 1
AWG16	Kabel schwarz cable black	= Wicklung 2 = winding 2
AWG16	Kabel Kabel cable cable	= Wicklung 3 = winding 3
AWG24	Kabel violett cable violet	= NTC in
AWG24	Kabel blau cable blue	= NTC out

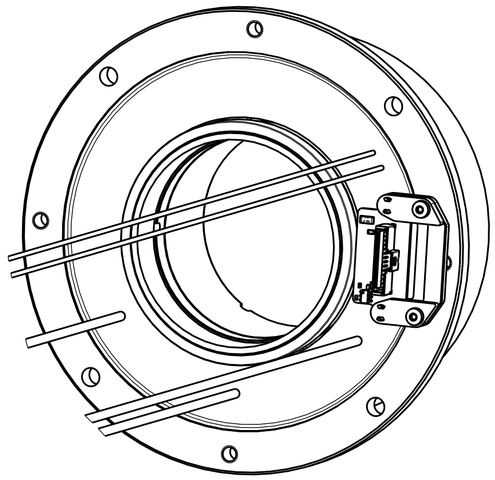

ACHTUNG / ATTENTION

Handhabungsvorschriften und Verpackungsmethoden beachten
observe precautions for handling and packing methods

Elektrostatisch gefaehrdete Bauelemente
electrostatic sensitive devices

Stator und Rotor werden getrennt verpackt und angeliefert.
Stator und Rotor muessen gepaart montiert werden.
Rotor and stator are separeted packed and delivered.
Stator and rotor must assembled paired

N/A	maxon tacho ENC TSX MAG	N/A
N/A	maxon motor EC frameless DT85L	N/A
Artikel Nr./part no.	Fertigprodukt/finished product	Basis Nr./basic no.

TOLERANCING	GENERAL TOLERANCES	SCREW THREAD TOLERANCES	GEOMETRICAL TOLERANCES	SURFACES	EDGES	N/A N/A
ISO 8015	ISO 2768-m	ISO 965-1	N/A	ISO 1302	ISO 13715	N/A

DOCUMENT TYPE	Dimensional Drawing	CO-ND: A100027027	DATE	NAME	SCALE	1:1	3D MODEL
TITLE EN	Dimensional Drawing	CREATED	22.02.2022	MMAGMUAG	SHEETS	A2/1/1	8886571
TITLE DE	EC frameless DT85L+TSX MAG	MODIFIED	18.05.2022	MMAGMUAG	DIMENSION UNITS	PROJECTION METHOD	
		RELEASED	13.07.2022	MMAGMUAG	mm	ISO 5456-1	
PART NUMBER	PART REVISION	DOCUMENT NUMBER					DOC REVISION
		8886572					03

maxon

www.maxongroup.com

Aenderungen von Produkt oder Prozessen nur mit schriftlicher Freigabe durch maxon. © Alle Rechte vorbehalten. Nutzung nur gemaess schriftlicher Vereinbarung erlaubt. / Modifications of product or processes only upon written approval of maxon. © All rights reserved. Use permitted only as agreed in writing.

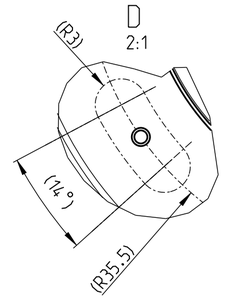

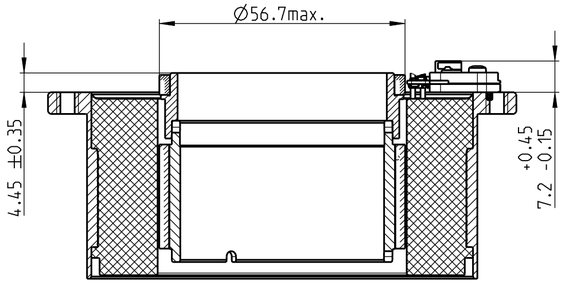

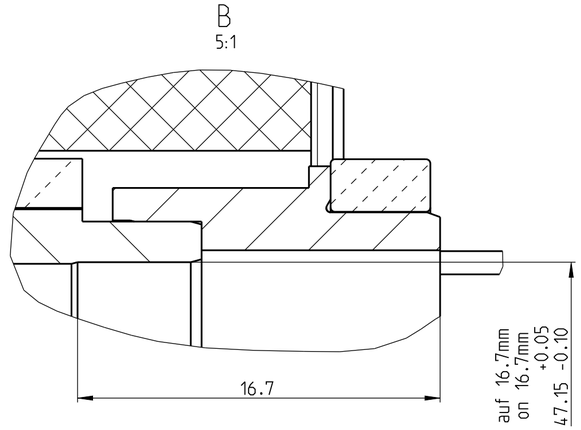

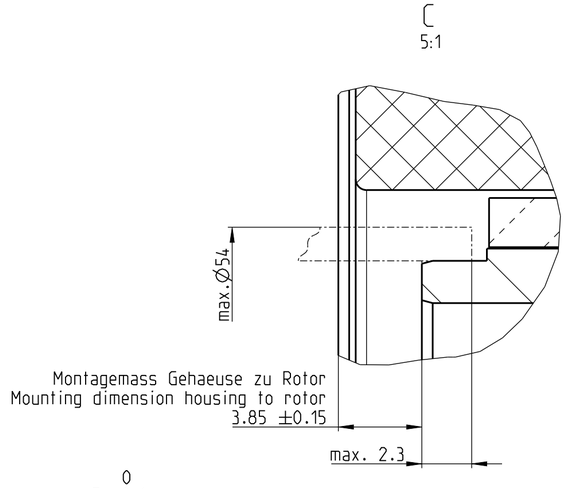

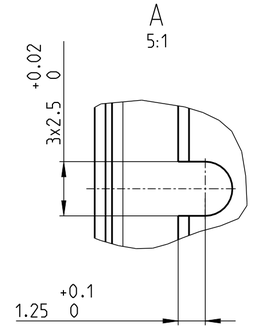

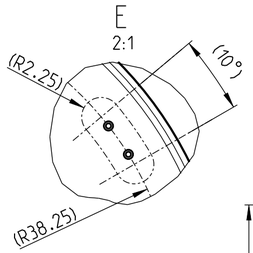

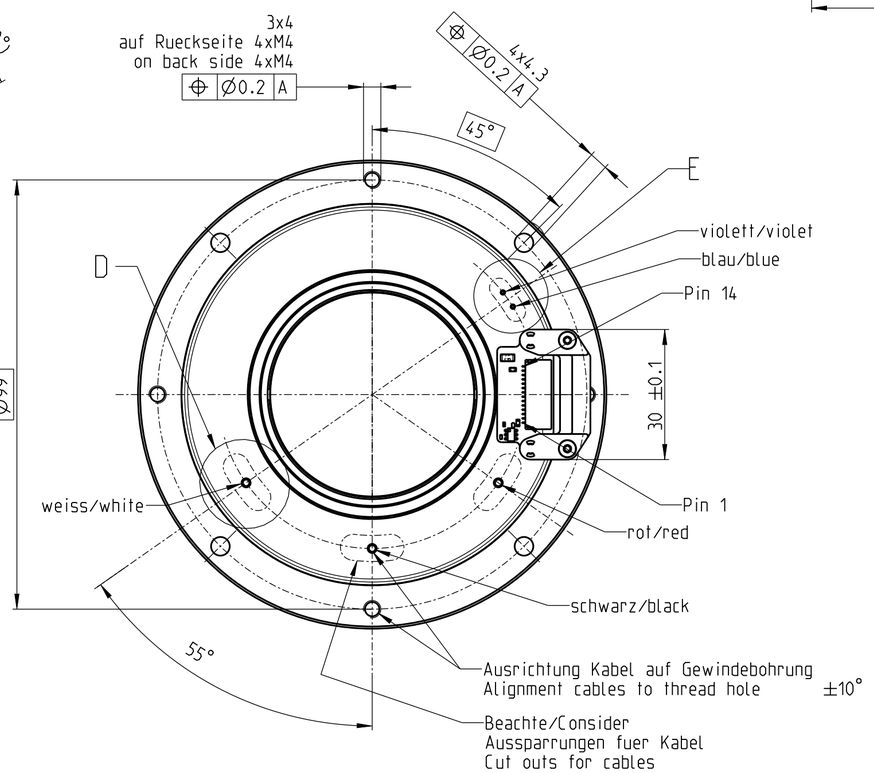

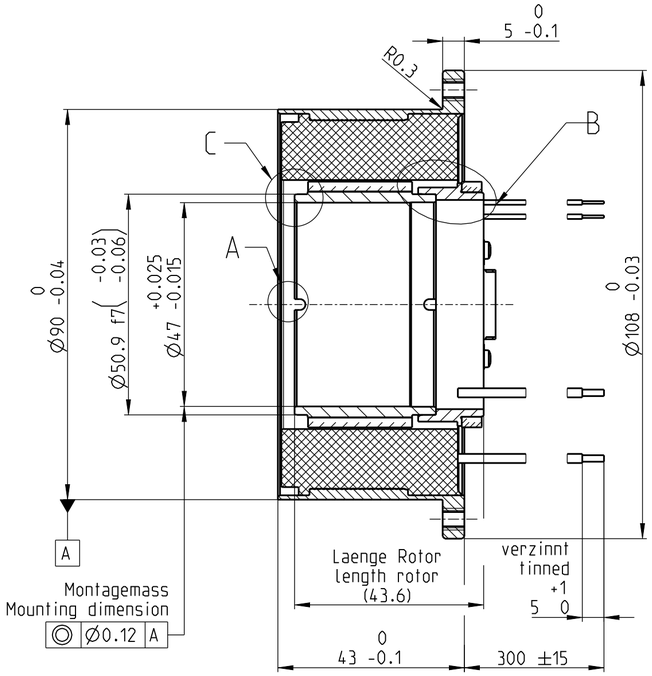

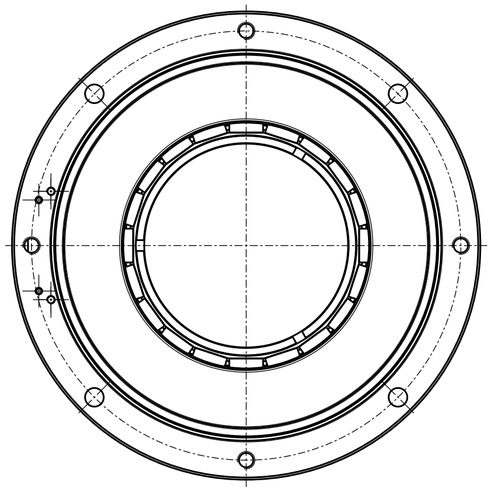

Steckerbelegung Kommutierung + Encoder PIN allocation Commutation + Encoder	
Pin	Signal
PIN 1	Vcc
PIN 2	GND
PIN 3	A/
PIN 4	A
PIN 5	B/
PIN 6	B
PIN 7	N.C.
PIN 8	N.C.
PIN 9	H1
PIN 10	H2
PIN 11	H3
PIN 12	N.C.
PIN 13	NTC+
PIN 14	NTC-

Kabelbelegung/wiring diagram		
AWG16	Kabel rot cable red	= Wicklung 1 = winding 1
AWG16	Kabel schwarz cable black	= Wicklung 2 = winding 2
AWG16	Kabel Kabel cable cable	= Wicklung 3 = winding 3
AWG24	Kabel violett cable violet	= NTC in
AWG24	Kabel blau cable blue	= NTC out

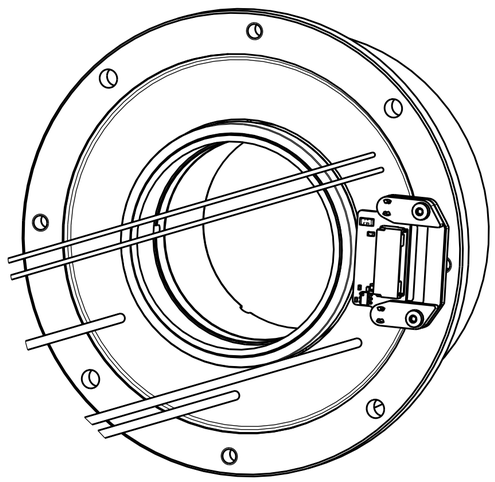

ACHTUNG / ATTENTION

Handhabungsvorschriften und Verpackungsmethoden beachten
observe precautions for handling and packing methods

Elektrostatisch gefaehrdete Bauelemente
electrostatic sensitive devices

Stator und Rotor werden getrennt verpackt und angeliefert.
Stator und Rotor muessen gepaart montiert werden.
Rotor and stator are separeted packed and delivered.
Stator and rotor must assembled paired

N/A	maxon tacho ENC TSX MAG	N/A
N/A	maxon motor EC frameless DT85L	N/A
Artikel Nr./part no.	Fertigprodukt/finished product	Basis Nr./basic no.

TOLERANCING	GENERAL TOLERANCES	SCREW THREAD TOLERANCES	GEOMETRICAL TOLERANCES	SURFACES	EDGES	N/A N/A
ISO 8015	ISO 2768-m	ISO 965-1	N/A	ISO 1302	ISO 13715	N/A

DOCUMENT TYPE	Dimensional Drawing	CO-NO: A100027027	DATE	NAME	SCALE	1:1	3D MODEL
TITLE EN	Dimensional Drawing	CREATED	30.03.2022	MMAGMUAG	SHEETS	A2/1/1	8886571
TITLE DE	EC frameless DT85L+TSX MAG	MODIFIED	19.05.2022	MMAGMUAG	DIMENSION UNITS: mm	PROJECTION METHOD: ISO 5456-1	
		RELEASED	13.06.2022	MMAGMUAG			
PART NUMBER: N/A	PART REVISION: N/A	DOCUMENT NUMBER: 8994972					DOC REVISION: 01

maxon

www.maxongroup.com

Aenderungen von Produkt oder Prozessen nur mit schriftlicher Freigabe durch maxon. © Alle Rechte vorbehalten. Nutzung nur gemäess schriftlicher Vereinbarung erlaubt. / Modifications of product or processes only upon written approval of maxon. © All rights reserved. Use permitted only as agreed in writing.

© 2025 maxon. All rights reserved. Any use, in particular reproduction, editing, translation, and copying, without prior written approval is not permitted (contact: maxon international ltd., Brünigstrasse 220, CH-6072 Sachseln, +41 41 666 15 00, www.maxongroup.com). Infringements will be prosecuted under civil and criminal law. The mentioned trademarks belong to their respective owners and are protected under trademark laws. Subject to change without prior notice.

mmag | «EC frameless DT» Installation Manual | Edition 2025-03 | DocID rel12808