ECX FLAT 42 S ∅42 mm, brushless, BLDC motor

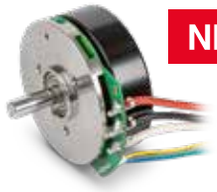

NEW

ECX FLAT

Key Data: 40/58.4 W, 55.8 mNm, 10 000 rpm

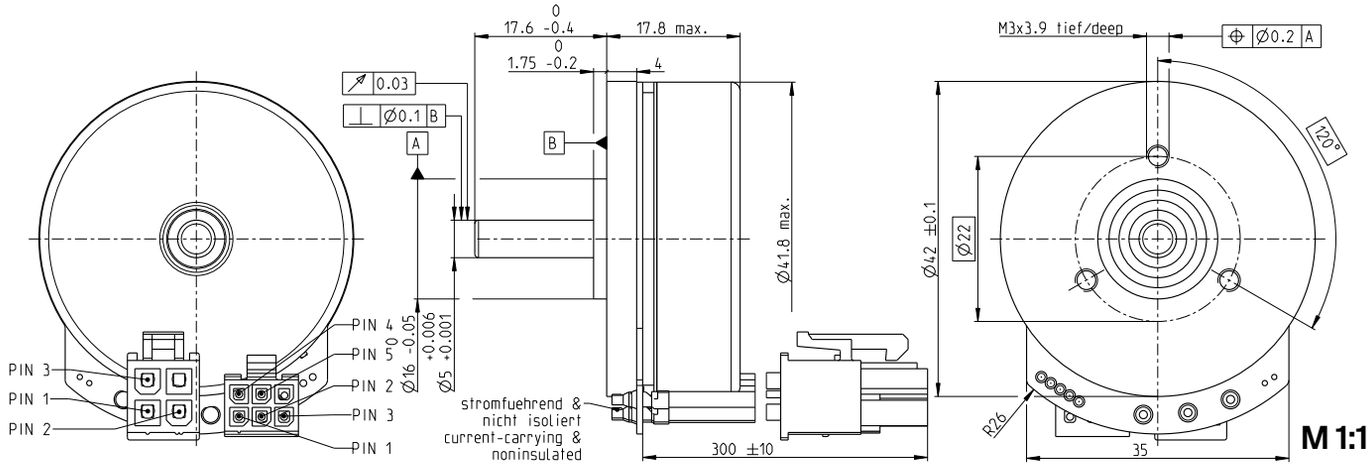

	Motor Data		
1_	Nominal voltage	V	24
2_	No load speed	rpm	8700
3_	No load current	mA	174
4_	Nominal speed	rpm	6290
5_	Nominal torque	mNm	59.8
6_	Nominal current (max. continuous current)	A	2.17
7_	Stall torque	mNm	217
8_	Stall current	A	23.6
9_	Max. efficiency	%	77.5
10_	Terminal resistance	Ω	1.01
11_	Terminal inductance	mH	0.802
12_	Torque constant	mNm/A	25.7
13_	Speed constant	rpm/V	372
14_	Speed/torque gradient	rpm/mNm	14.7
15_	Mechanical time constant	ms	13.5
16_	Rotor inertia	gcm^2	87.5

	Thermal data		
17_	Thermal resistance housing-ambient	K/W	2.83
18_	Thermal resistance winding-housing	K/W	5.82
19_	Thermal time constant winding	s	19.9
20_	Thermal time constant motor	s	157
21_	Ambient temperature	°C	-40...+100
22_	Max. winding temperature	°C	125

	Mechanical data ball bearings		
23_	Max. speed	rpm	10000
24_	Axial play at axial load	< 6 N	0 mm
		> 6 N	0.14 mm
	Direction of force		pull
25_	Radial play		preloaded
26_	Max. axial load (dynamic)	N	6
27_	Max. force for press fits (static)	N	86
	(static, shaft supported)	N	1300
28_	Max. radial load [mm from flange]	N	35 [5]

	Other specifications		
29_	Number of pole pairs		8
30_	Number of phases		3
31_	Weight of motor	g	112

Operating Range

n [rpm] winding 48 V

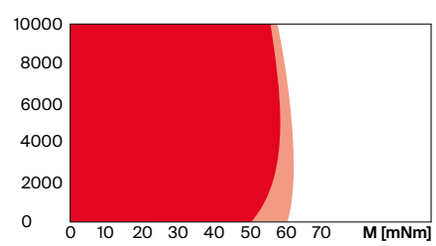

- Continuous operation
- Continuous operation with reduced thermal resistance R_{th2} 50%
- Short term operation

Modular System Details on catalog page 42

Gear	Stages [opt.]	Sensor	Motor Control
409_GPX 42 C	1–4	496_ENX 42 MILE	547_DEC Module 24/2
409_GPX 42 UP	1–4		547_DEC Module 50/5
			550_ESCON Module 24/2
			551_ESCON 36/3 EC
			551_ESCON Module 50/5
			553_ESCON 50/5
			561_EPOS4 Micro 24/5 CAN
			561_EPOS4 Micro 24/5 EtherCAT
			562_EPOS4 Module 50/5
			563_Compact 24/5 EtherCAT 3-axes
			565_EPOS4 Compact 50/5
			567_EPOS4 50/5

Connections, motor (cable AWG 18)
Pin 1 Motor winding 1
Pin 2 Motor winding 2
Pin 3 Motor winding 3
Pin 4 N.C.
Connector, Part number
Molex, 39-01-2040

Connections, sensors (cable AWG 28)
Pin 1 Hall sensor 1
Pin 2 Hall sensor 2
Pin 3 Hall sensor 3
Pin 4 GND
Pin 5 V_{Hall} 2.7...24 VDC
Pin 6 N.C.
Connector, Part number
Molex, 43025-0600
Circuit diagram for Hall sensors see page 67.
No pull-up resistor required.
Output signals: CMOS compatible push-pull stage.

Configuration

Flange: Standard flange/aluminum flange
Shaft, front: Length/shaft shoulder/faces
Shaft, rear: Length/shaft shoulder

© 2024 maxon. All rights reserved. March edition. Provisional data. Subject to change.