maxon

EPOS4 Disk 60/8

Hardware Reference

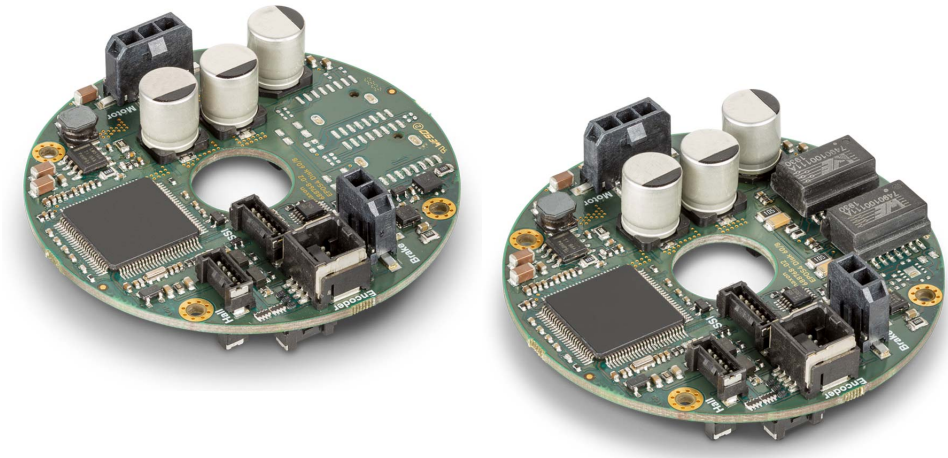

epos.maxongroup.com

EPOS4 Disk 60/8 Positioning Controller | P/Ns 688770 / 688772
Hardware Reference
CCMC | Edition 2022-04 | DocID rel10495

TABLE OF CONTENTS

1 ABOUT 5

1.1 About this Document . . . 5
1.2 About the Device . . . 8
1.3 About the Safety Precautions . . . 9

2 SPECIFICATIONS 11

2.1 Technical Data . . . 11
2.2 Thermal Data . . . 13
2.3 Limitations . . . 14
2.4 Dimensional Drawings . . . 15
2.5 Standards . . . 16

3 SETUP 17

3.1 Generally applicable Rules . . . 17
3.2 Cabling . . . 18
3.3 Connections . . . 20
3.3.1 Power & Logic Supply (X1/X2) . . . 21
3.3.2 Motor (X3) . . . 23
3.3.3 Hall Sensor (X4) . . . 24
3.3.4 Encoder (X5) . . . 25
3.3.5 SSI (X6) . . . 28
3.3.6 Digital I/O (X7) . . . 30
3.3.7 Analog I/O (X8) . . . 33
3.3.8 USB (X13) . . . 35
3.3.9 CAN IN (X14) & CAN OUT (X15) . . . 36
3.3.10 EtherCAT IN (X14) & EtherCAT OUT (X15) . . . 38
3.3.11 Brake (X16) . . . 39
3.4 Prefab Cable Assemblies . . . 40

READ THIS FIRST

***These instructions are intended for qualified technical personnel. Prior commencing with any activities**…*

- *you must carefully read and understand this manual and*
- *you must follow the instructions given therein.*

***The EPOS4 Disk 60/8** positioning controllers are considered as partly completed machinery according to EU Directive 2006/42/EC, Article 2, Clause (g) and **are intended to be incorporated into or assembled with other machinery or other partly completed machinery or equipment**.*
***Therefore, you must not put the device into service**,…*

- *unless you have made completely sure that the other machinery fully complies with the EU directive's requirements!*
- *unless the other machinery fulfills all relevant health and safety aspects!*
- *unless all respective interfaces have been established and fulfill the herein stated requirements!*

3.5 DIP Switch Configuration (SW1) 45
3.5.1 CAN ID (Node-ID) / DEV ID 45
3.5.2 CAN automatic Bit Rate Detection 47
3.5.3 CAN Bus Termination 47
3.6 Status Indicators 48

4 WIRING 51

4.1 Possible Combinations to connect a Motor 52
4.2 Main Wiring Diagrams 54
4.3 Excerpts 56

LIST OF FIGURES 59

LIST OF TABLES 60

INDEX 62

••page intentionally left blank••

1 ABOUT

1.1 About this Document

1.1.1 Intended Purpose

Use the document to…
***–stay safe**,*
***–be fast**,*
***–end up with set up and ready-to-go equipment**.*

The purpose of the present document is to familiarize you with the EPOS4 Disk 60/8 positioning controller. It will highlight the tasks for safe and adequate installation and/or commissioning. Follow the described instructions …

- to avoid dangerous situations,
- to keep installation and/or commissioning time at a minimum,
- to increase reliability and service life of the described equipment.

The present document is part of a documentation set and contains performance data and specifications, information on fulfilled standards, details on connections and pin assignment, and wiring examples. The below overview shows the documentation hierarchy and the interrelationship of its individual parts:

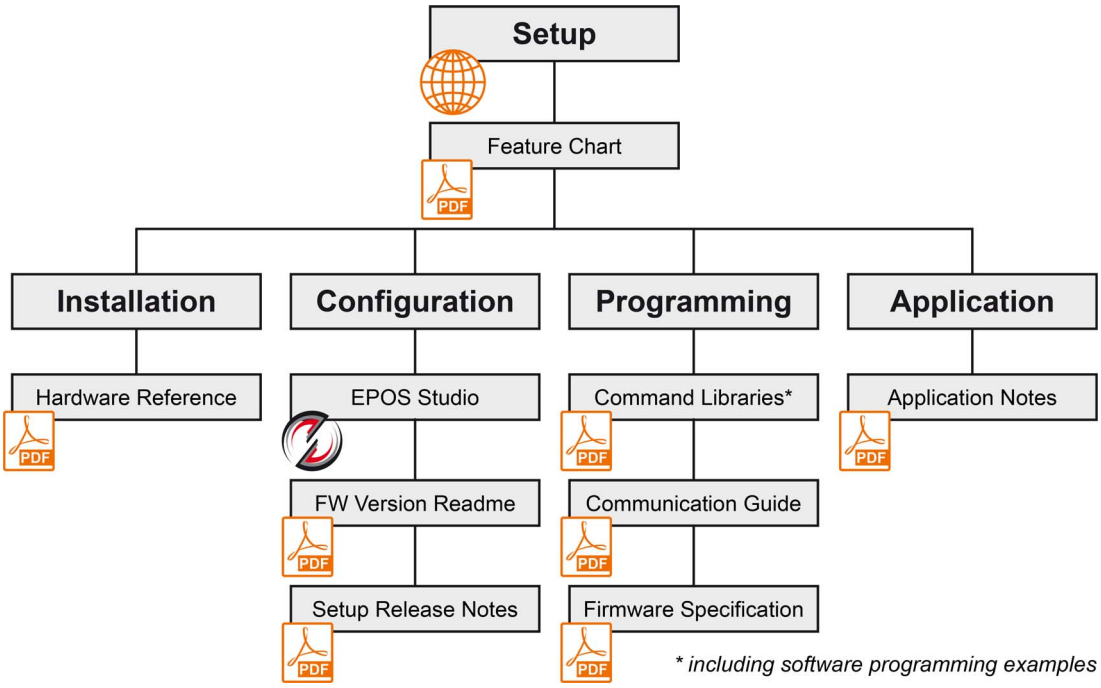

Figure 1-1 Documentation structure

1.1.2 Target Audience

The present document is intended for trained and skilled personnel. It conveys information on how to understand and fulfill the respective work and duties.

1.1.3 How to use

Throughout the document, the following notations and codes will be used.

Notation	Meaning
(n)	refers to an item (such as part numbers, list items, etc.)
➔	denotes “see”, “see also”, “take note of” or “go to”

Table 1-1 Notation used

1.1.4 Symbols & Signs

In the course of the present document, the following symbols and signs will be used.

Type	Symbol	Meaning	
Safety alert	(typical)	DANGER	Indicates an **imminent hazardous situation**. If not avoided, it **will result in death or serious injury**.
		WARNING	Indicates a **potential hazardous situation**. If not avoided, it **can result in death or serious injury**.
		CAUTION	Indicates a **probable hazardous situation** or calls the attention to unsafe practices. If not avoided, it **may result in injury**.
Prohibited action	(typical)	Indicates a dangerous action. Hence, **you must not**!	
Mandatory action	(typical)	Indicates a mandatory action. Hence, **you must**!	
Information		Requirement / Note / Remark	Indicates an activity you must perform prior continuing, or gives information on a particular item you need to observe.
		Best practice	Indicates an advice or recommendation on the easiest and best way to further proceed.
		Material Damage	Indicates information particular to possible damage of the equipment.

Table 1-2 Symbols and signs

1.1.5 Trademarks and Brand Names

For easier legibility, registered brand names are listed below and will not be further tagged with their respective trademark. It must be understood that the brands (the list below is not necessarily concluding) are protected by copyright and/or other intellectual property rights even if their legal trademarks are omitted in the later course of this document.

Brand Name	Trademark Owner
Adobe® Reader®	© Adobe Systems Incorporated, USA-San Jose, CA
CANopen® CiA®	© CiA CAN in Automation e.V, DE-Nuremberg
EnDat	© DR. JOHANNES HEIDENHAIN GmbH, DE-Traunreut
EtherCAT®	© EtherCAT Technology Group, DE-Nuremberg, licensed by Beckhoff Automation GmbH, DE-Verl
ix Industrial®	© HARTING AG & Co. KG, DE-Espelkamp
Linux®	© Linus Torvalds (The Linux Foundation, USA-San Francisco CA)
Micro-Fit™ Micro-Lock™	© Molex, USA-Lisle, IL
Windows®	© Microsoft Corporation, USA-Redmond, WA

Table 1-3 Brand names and trademark owners

1.1.6 Copyright

This document is protected by copyright. Any further use (including reproduction, translation, microfilming, and other means of electronic data processing) without prior written approval is not permitted. The mentioned trademarks belong to their respective owners and are protected under intellectual property rights.
© 2022 maxon. All rights reserved. Subject to change without prior notice.

CCMC | EPOS4 Disk 60/8 Hardware Reference | Edition 2022-04 | DocID rel10495

maxon motor ag
Brünigstrasse 220 +41 41 666 15 00
CH-6072 Sachseln www.maxongroup.com

1.2 About the Device

Capabilities of the device, included features, and supported motors.

maxon's EPOS4 Disk 60/8 is a round-sized, full digital, smart positioning control unit with a center hole for cable feed-trough. Its high power density allows flexible use for brushed DC and brushless EC (BLDC) motors up to approximately 480 Watts with various feedback options, such as Hall sensors, incremental encoders as well as absolute sensors in a multitude of drive applications.
The device provides motor and sensor connections on one side and power, communication, and I/O connections on the other side. The center hole provides room for the implementation of power and communication lines.

The EPOS4 Disk 60/8 is specially designed to be commanded and controlled as a slave node in a CANopen or an EtherCAT network. In addition, it can be operated via any USB communication port of a Windows or Linux workstation.

Latest technology, such as field-oriented control (FOC), acceleration/velocity feed forward, or dual loop, in combination with highest control cycle rates allow sophisticated, ease-of-use motion control.

The device is available in the following versions:

- EPOS4 Disk 60/8 CAN (688770)
- EPOS4 Disk 60/8 EtherCAT (688772)

For easier legibility, in the later course of this document naming of components will be as follows:

Short form	Meaning
Disk	any type of EPOS4 Disk 60/8 version
Disk CAN	EPOS4 Disk 60/8 CAN
Disk EtherCAT	EPOS4 Disk 60/8 EtherCAT
EPOS4	all controller versions (Module and Compact) as well as other EPOS4 positioning controllers as a whole

Table 1-4 Abbreviations

Find the latest edition of the present document as well as additional documentation and software for EPOS4 positioning controllers also on the Internet: ➔http://epos.maxongroup.com

In addition, you may wish to browse the EPOS video library. It features video tutorials that provide easy to follow instructions on how to get started with «EPOS Studio» and shows you tips and tricks on how to setup communication interfaces, and so on. Explore on Vimeo: ➔https://vimeo.com/album/4646388

1.3 About the Safety Precautions

Keep in mind: Safety first! Always!

- Make sure that you have read and understood the note “READ THIS FIRST” on page A-2!
- Do not engage with any work unless you possess the stated skills (➔chapter “1.1.2 Target Audience” on page 1-5)!
- Refer to ➔chapter “1.1.4 Symbols & Signs” on page 1-6 to understand the subsequently used indicators!
- You must observe any regulation applicable in the country and/or at the site of implementation with regard to health and safety/accident prevention and/or environmental protection!

DANGER

High voltage and/or electrical shock
Touching live wires causes death or serious injuries!

- *Consider any power cable as connected to live power, unless having proven the opposite!*
- *Make sure that neither end of cable is connected to live power!*
- *Make sure that power source cannot be engaged while work is in process!*
- *Obey lock-out/tag-out procedures!*
- *Make sure to securely lock any power engaging equipment against unintentional engagement and tag it with your name!*

Requirements

- *Make sure that all associated devices and components are installed according to local regulations.*
- *Be aware that, by principle, an electronic apparatus cannot be considered fail-safe. Therefore, you must make sure that any machine/apparatus has been fitted with independent monitoring and safety equipment. If the machine/apparatus should break down, if it is operated incorrectly, if the control unit breaks down or if the cables break or get disconnected, etc., the complete drive system must return – and be kept – in a safe operating mode.*
- *Be aware that you are not entitled to perform any repair on components supplied by maxon.*

Electrostatic sensitive device (ESD)

- *Wear working cloth and use equipment in compliance with ESD protective measures.*
- *Handle device with extra care.*

••page intentionally left blank••

2 SPECIFICATIONS

2.1 Technical Data

EPOS4 Disk 60/8 CAN (688770) EPOS4 Disk 60/8 EtherCAT (688772)		
Electrical Rating	Nominal power supply voltage $+V_{CC}$ [a]	12…60 VDC
	Nominal logic supply voltage $+V_C$	12…60 VDC
	Absolute supply voltage $+V_{min}$ / $+V_{max}$	10 VDC / 61 VDC
	Output voltage (max.)	0.9 x $+V_{CC}$
	Output current I_{cont} / I_{max} (<10 s)	8 A / 24 A
	Pulse Width Modulation frequency	50 kHz
	Sampling rate PI current controller	25 kHz (40 µs)
	Sampling rate PI speed controller	2.5 kHz (400 µs)
	Sampling rate PID positioning controller	2.5 kHz (400 µs)
	Sampling rate analog input	2.5 kHz (400 µs)
	Max. efficiency	98% (➔Figure 2-3)
	Max. speed EC motor (block)	100’000 rpm (1 pole pair)
	Max. speed EC motor (sinusoidal)	50’000 rpm (1 pole pair)
	Built-in motor choke	—
Inputs & Outputs	Digital Input 1 (general purpose) Digital Input 2 (general purpose) Digital Input 3 (general purpose) Digital Input 4 (general purpose)	Logic: +2.1…+36 VDC
	Digital Output 1 (general purpose) Digital Output 2 (general purpose)	max. 36 VDC / I_L ≤500 mA (open drain with internal pull-up)
	High-Speed Digital Output 2 (Holding Brake only)	configurable, max. $+V_{CC}$ [a] / I_L ≤700 mA (PWM frequency 25 kHz)
	Analog Input 1 Analog Input 2	Resolution 12-bit, −10…+10 V, 10 kHz, differential
	Analog Output 1	Resolution 12-bit, −4…+4 V, 25 kHz, referenced to GND
	Digital Hall sensor signals H1, H2, H3	+2.0…+24 VDC (internal pull-up)
	Digital incremental encoder signals A, A\, B, B\, I, I\	EIA RS422, max. 6.25 MHz

Continued on next page.

EPOS4 Disk 60/8 CAN (688770) EPOS4 Disk 60/8 EtherCAT (688772)				
Inputs & Outputs (continued)	Sensor signals (choice between multiple functions) • SSI absolute encoder signals • High-speed digital input 4 and High-speed digital output 1		EIA RS422, 0.4…2 MHz, configurable EIA RS422, max. 6.25 MHz	
Voltage Outputs	Sensor supply voltage V_{Sensor}		+5 VDC / I_L ≤100 mA	
	Auxiliary output voltage V_{Aux}		+5 VDC / I_L ≤150 mA	
Motor Connections	DC motor		+ Motor, − Motor	
	EC motor		Motor winding 1, Motor winding 2, Motor winding 3	
Interfaces			**Disk CAN**	**Disk EtherCAT**
	USB 2.0 / USB 3.0		Full Speed	Full Speed
	CAN		max. 1 Mbit/s	—
	EtherCAT		—	Full duplex (100 Mbit/s) as to IEEE 802.3 100 Base T
Status Indicators			**Disk CAN**	**Disk EtherCAT**
	Device status		Operation (green) Error (red)	Operation (green) Error (red)
	NET Status		—	RUN state (green) Error (red)
	NET Port		—	Link activity (green)
Physical			**Disk CAN**	**Disk EtherCAT**
	Weight		approx. 24 g	approx. 26 g
	Dimensions (D outside/center hole x H)		Ø60/14 x 22 mm	
	Mounting		4 mounting holes for M2 screws	
Environment	Temperature	Operation	−30…+45 °C	−30…+35 °C
		Extended range [b]	+45…+75 °C; Derating: −0.267 A/°C (➔Figure 2-2)	+35…+65 °C; Derating: −0.267 A/°C (➔Figure 2-2)
		Storage	−40…+85 °C	
	Altitude [c]	Operation	0…6’000 m MSL	
		Extended range [b]	6’000…10’000 m MSL Derating ➔Figure 2-2	
	Humidity		5…90% (condensation not permitted)	

[a] Minimal power supply voltage $+V_{CC}$ must be equal or greater than the required holding brake supply voltage.

[b] Operation within the extended range is permitted. However, a respective derating (declination of output current I_{cont}) as to the stated values will apply.

[c] Operating altitude in meters above Mean Sea Level, MSL.

Table 2-5 Technical data

2.2 Thermal Data

2.2.1 Derating of Output Current

Disk CAN

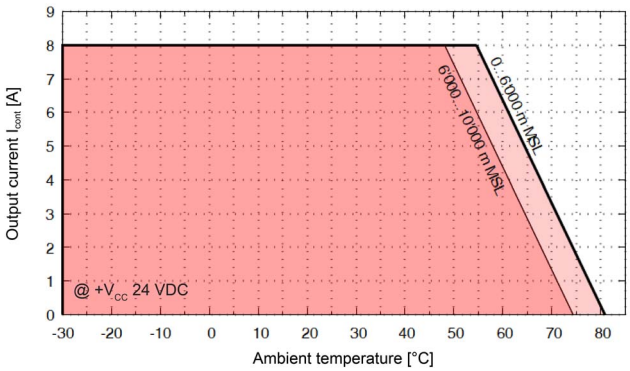

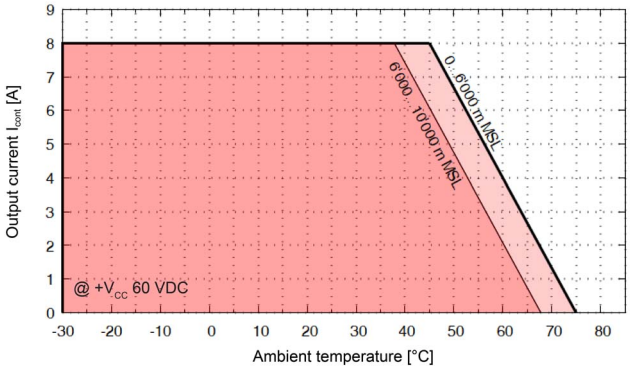

Disk EtherCAT

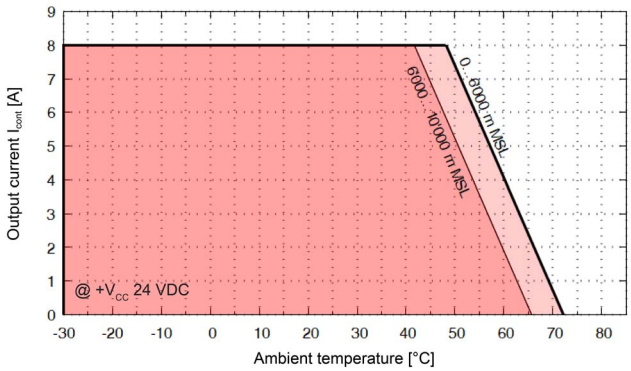

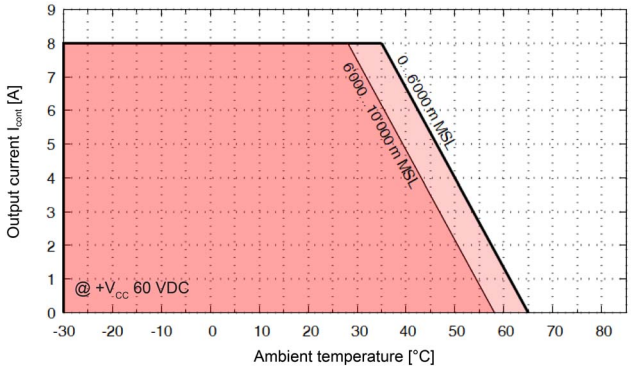

Figure 2-2 Derating of output current

2.2.2 Power Dissipation and Efficiency

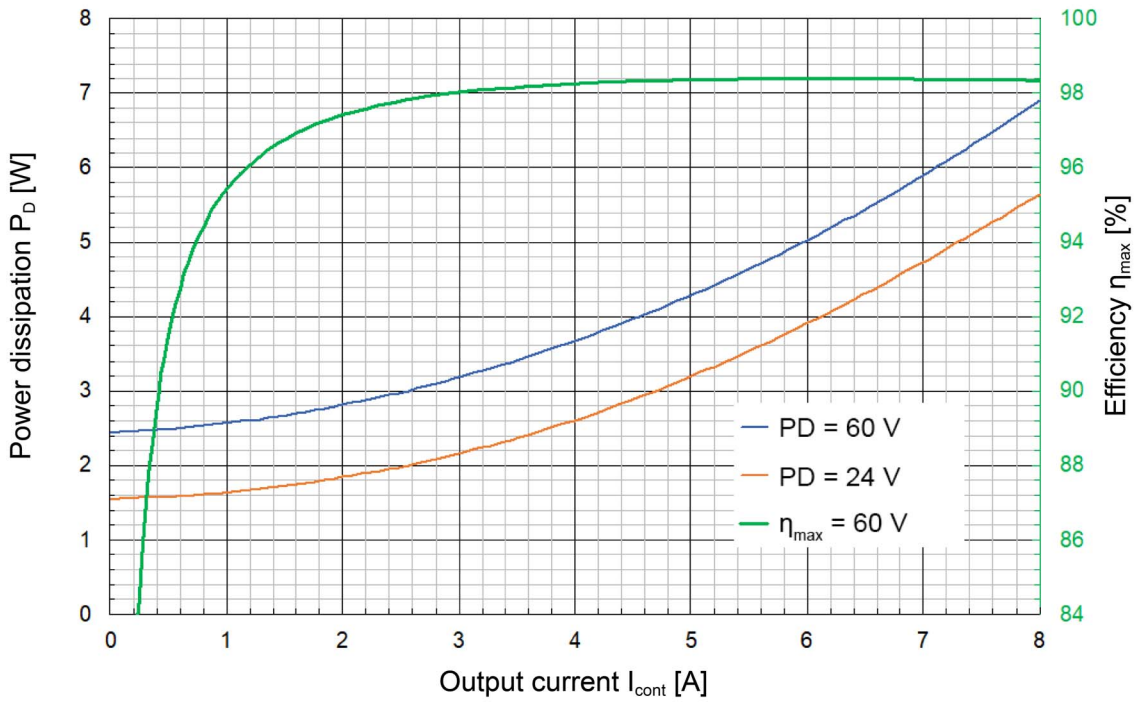

Figure 2-3 Power dissipation and efficiency

2.3 Limitations

Protection functionality	Switch-off threshold	Recovery threshold
Undervoltage	8.0 V	8.5 V
Overvoltage	64 V	63 V
Overcurrent	±39 A	—
Thermal overload	95 °C	90 °C

Table 2-6 Limitations

2.4 Dimensional Drawings

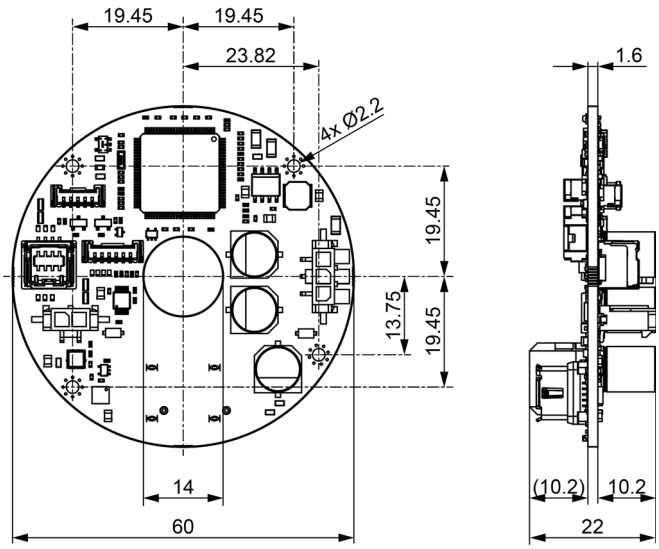

Figure 2-4 EPOS4 Disk 60/8 CAN – Dimensional drawing [mm]

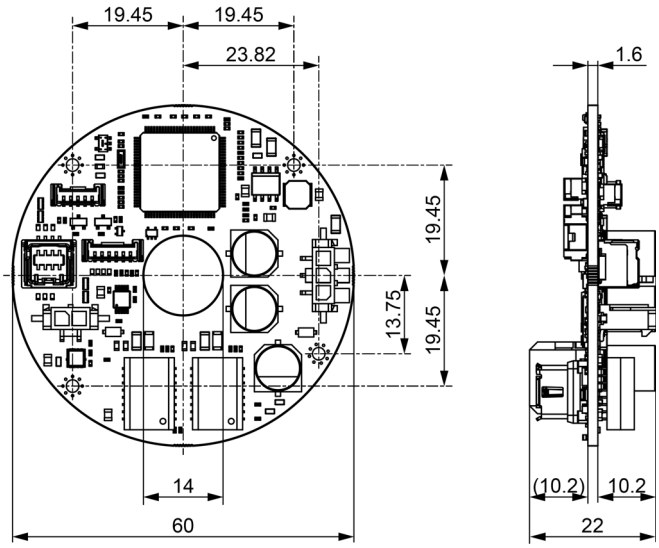

Figure 2-5 EPOS4 Disk 60/8 EtherCAT – Dimensional drawing [mm]

2.5 Standards

The device described was successfully tested in the following setup for compliance with the standards listed below: EPOS4 Disk 60/8 EtherCAT (688772) integrated into maxon's Robot Joint 60.

In practical terms, only the complete system (the fully operational equipment comprising all individual components, such as motor, servo controller, power supply unit, EMC filter, cabling etc.) can undergo an EMC test to ensure interference-free operation.

Important Notice
The device's compliance with the mentioned standards does not imply its compliance within the final, ready to operate setup. In order to achieve compliance of your operational system, you must perform EMC testing of the involved equipment as a whole.

Electromagnetic Compatibility		
Generic	IEC/EN 61000-6-2	Immunity for industrial environments
	IEC/EN 61000-6-3	Emission standard for residential, commercial and light-industrial environments
Applied	IEC/EN 55032 (CISPR32)	Radio disturbance characteristics / radio interference
	IEC/EN 61000-4-2	Electrostatic discharge immunity test 8 kV/4 kV
	IEC/EN 61000-4-3	Radiated, radio-frequency, electromagnetic field immunity test >10 V/m
	IEC/EN 61000-4-4	Electrical fast transient/burst immunity test ±2 kV
	IEC/EN 61000-4-6	Immunity to conducted disturbances, induced by radio-frequency fields 10 Vrms
	IEC/EN 61000-4-8	Power frequency magnetic field 30 A/m

Others		
Environment	IEC/EN 60068-2-6	Environmental testing – Test Fc: Vibration (sinusoidal, 10…500 Hz, 20 m/s^2)
	MIL-STD-810F	Random transport (10…500 Hz up to 2.53 g_{rms})
Safety	UL File Number	Unassembled printed circuit board: E229342
Reliability	MIL-HDBK-217F	Reliability prediction of electronic equipment Environment: Ground, benign (GB) Ambient temperature: 298 K (25 °C) Component stress: In accordance with circuit diagram and nominal power Mean Time Between Failures (MTBF) • Disk CAN: 395'482 hours • Disk EtherCAT: 277'794 hours

Table 2-7 Standards

3 SETUP

IMPORTANT NOTICE: PREREQUISITES FOR PERMISSION TO COMMENCE INSTALLATION

The EPOS4 Disk 60/8 positioning controllers are considered as partly completed machinery according to EU Directive 2006/42/EC, Article 2, Clause (g) and **are intended to be incorporated into or assembled with other machinery or other partly completed machinery or equipment**.

WARNING

Risk of injury
Operating the device without the full compliance of the surrounding system with the EU Directive 2006/42/EC may cause serious injuries!

- *Do not operate the device, unless you have made completely sure that the other machinery fully complies with the EU directive's requirements!*
- *Do not operate the device, unless the other machinery fulfills all relevant health and safety aspects!*
- *Do not operate the device, unless all respective interfaces have been established and fulfill the requirements stated in this document!*

3.1 Generally applicable Rules

Maximal permitted supply voltage

- *Make sure that supply power is between 12…60 VDC.*
- *Supply voltages above 67 VDC, or wrong polarity will destroy the unit.*
- *Note that the necessary output current is depending on the load torque. Yet, the output current limits are as follows:*
  – continuous max. 8 A
  – short-time (acceleration) max. 24 A

Hot plugging the USB interface may cause hardware damage

If the USB interface is being hot-plugged (connecting while the power supply is on), the possibly high potential differences of the two power supplies of controller and PC/Notebook can lead to damaged hardware.

- *Avoid potential differences between the power supply of controller and PC/Notebook or, if possible, balance them.*
- *Insert the USB connector first, then switch on the power supply of the controller.*

Hot plugging/hot swapping the extension slots may cause hardware damage

Switch off the controller's power supply before removing or inserting an extension card.

3.2 Cabling

PLUG&PLAY

Take advantage of maxon's prefab cable assemblies. They come as ready-to-use parts and will help to reduce commissioning time to a minimum.

a) Check the following table and find the part number of the cable assembly that matches the setup you will be using.

b) Follow the cross-reference to get the cable's pin assignment.

Connector	Prefab Cable Assembly		
	Designation	**Part Number**	**➔Page**
X1/X2	Power & Motor Cable	696283	3-40
X3	Power & Motor Cable	696283	3-40
X4	Hall Sensor Cable	696284	3-40
X5	Encoder Cable	696285	3-41
X6	Sensor Cable 3x2core	696286	3-41
X7	Signal Cable 8core	696287	3-41
X8	Signal Cable 7core	696288	3-42
X13	USB Type A-Micro-Lock Cable	696289	3-42
X14 X15	CAN-CAN Cable CAN-COM Cable	710931 710932	3-42 3-43
X14 X15	EtherCAT-EtherCAT Cable EtherCAT-COM Cable	710933 710934	3-43 3-44
X16	Brake Cable	710928	3-44

Table 3-8 Prefab maxon cables

MAKE&BAKE YOUR OWN

If you decide not to employ maxon's prefab cable assemblies, you might wish to use the prepackaged kit. It contains the connectors required to make up your own cabling (**connectors for CAN/EtherCAT communication not included**, for details see ➔Table 3-43 and ➔Table 3-46).

And you also can make use of matching plugs to connect to your network bus (➔Table 3-10).

EPOS4 Disk Connector Set (710926)		
Connector	**Specification**	**Quantity**
Connectors		
X1, X2	Molex Mini-Fit Jr., dual row, 2 poles (3901-2025)	2
X1/X2, X3	Molex Micro-Fit 3.0, single row, 3 poles (43645-0300)	2
X3	Molex Mini-Fit Jr., dual row, 4 poles (3901-2045)	1
X4	Molex Micro-Lock Plus, single row, 3 poles (505565-0501)	1
X5	Molex Micro-Lock Plus, dual row, 8 poles (505432-0801)	1
X6	Molex Micro-Lock Plus, single row, 6 poles (505565-0601)	1
X7	Molex Micro-Lock Plus, single row, 8 poles (505565-0801)	1
X8	Molex Micro-Lock Plus, single row, 7 poles (505565-0701)	1
X13	Molex Micro-Lock Plus, single row, 4 poles (505565-0401)	1
X16	Molex Micro-Fit 3.0, single row, 2 poles (43645-0200)	1
Crimp Terminals		
X1, X2, X3	Molex Mini-Fit Plus HCS, AWG16 (45750-3111)	8
X1/X2, X3, X16	Molex Micro-Fit 3.0 female crimp terminal (43030-0010)	8
X4, X5, X6, X7, X8, X13	Molex Micro-Lock Plus female crimp terminal (505431-1000)	40

Table 3-9 EPOS4 Disk Connector Set – Content

EPOS4 Disk Communication Plugs			
Connector	**Bus**	**Specification**	**Part number**
Suitable plug for connector X14/X15	CAN	CAN ix Industrial Type B plug [*]	751388
	EtherCAT	EtherCAT ix Industrial Type A plug [*]	748166

[*] Suitable for cables with an outer diameter of 6.3…7.2 mm and a conductor cross section AWG24 (1.1…1.25 mm)

Table 3-10 EPOS4 Disk Communication Plugs

TOOLS

Tool	Manufacturer	Part number
Hand crimper for ix Industrial	HARTING	09 45 800 0181
Hand crimper for Micro-Fit crimp terminals AWG18	Molex	63828-0200
Hand crimper for Micro-Fit crimp terminals AWG20…AGW30	Molex	63819-0000
Hand crimper for Micro-Lock crimp terminals	Molex	63827-6900

Table 3-11 Recommended tools

3.3 Connections

The actual connection will depend on the overall configuration of your drive system and the type of motor you will be using.

For each connector you will find detailed information on the pin assignment, the available accessories and prefab cable assemblies, the requirements that must be met, if any, and the circuitry.

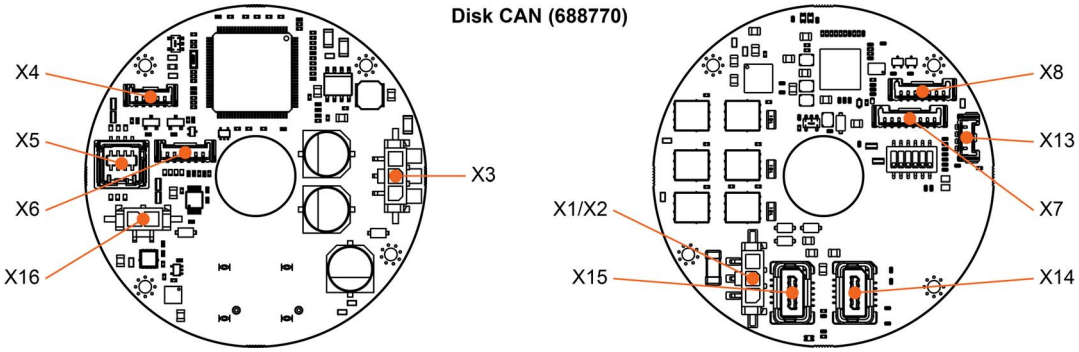

X1/X2	Power & Logic Supply ➔page 3-21	**X8**	Analog I/O ➔page 3-33
X3	Motor ➔page 3-23	**X13**	USB ➔page 3-35
X4	Hall Sensor ➔page 3-24	**X14**	CAN IN ➔page 3-36
X5	Encoder ➔page 3-25	**X15**	CAN OUT ➔page 3-36
X6	SSI ➔page 3-28	**X16**	Brake ➔page 3-39
X7	Digital I/O ➔page 3-30		

Figure 3-6 EPOS4 Disk 60/8 CAN – Connectors

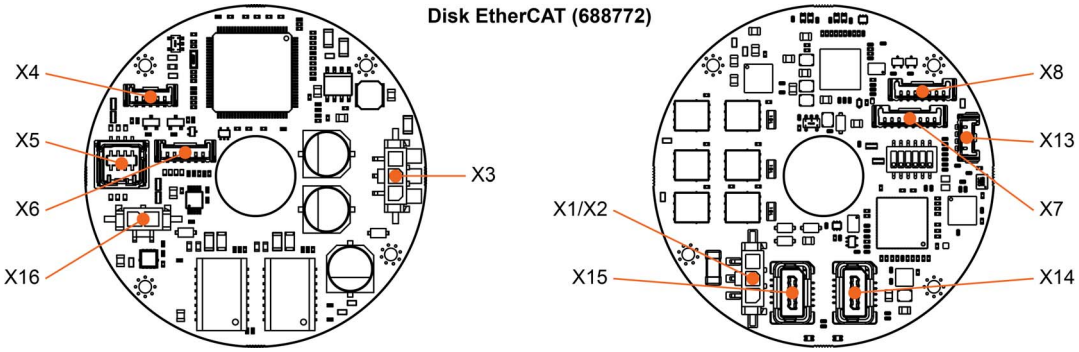

X1/X2	Power & Logic Supply ➔page 3-21	**X8**	Analog I/O ➔page 3-33
X3	Motor ➔page 3-23	**X13**	USB ➔page 3-35
X4	Hall Sensor ➔page 3-24	**X14**	EtherCAT IN ➔page 3-38
X5	Encoder ➔page 3-25	**X15**	EtherCAT OUT ➔page 3-38
X6	SSI ➔page 3-28	**X16**	Brake ➔page 3-39
X7	Digital I/O ➔page 3-30		

Figure 3-7 EPOS4 Disk 60/8 EtherCAT – Connectors

3.3.1 Power & Logic Supply (X1/X2)

Basically, any power supply may be used provided that it meets the stated minimum requirements. A separately sourced logic supply is optional.

Danger of confusion
*Note that **both connectors X1/X2** (Power & Logic Supply) **and X3** (Motor) **are of identical type**. Make sure not to interchange them.*

Best practice
Keep the motor mechanically disconnected during the setup and adjustment phase.

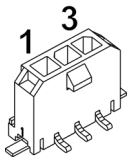

Figure 3-8 Power and logic supply combo connector X1/X2

X1/X2 Pin	Signal	Description
1	GND	Ground
2	$+V_{CC}$	Power supply voltage (+12…+60 VDC)
3	$+V_{C}$	Logic supply voltage (+12…+60 VDC)

Table 3-12 Power and logic supply combo connector X1/X2 – Pin assignment

Combo Connector X1/X2		
Suitable cable	➔Power & Motor Cable on page 3-40	
Suitable plug	Housing	Molex Micro-Fit (0436450300)
	Contact	Molex Micro-Fit (0430300038)

Table 3-13 Power and logic supply combo connector X1/X2 – Specifications

Continued on next page.

Power supply requirements	
Output voltage	$+V_{CC}$ 12…60 VDC
Absolute output voltage	min. 10 VDC; max. 61 VDC
Output current	Depending on load • continuous max. 8 A • short-time (acceleration, <10 s) max. 24 A

Table 3-14 Power supply requirements

Logic supply requirements (optional)	
Output voltage	$+V_C$ 12…60 VDC
Absolute output voltage	min. 10 VDC; max. 61 VDC
Min output power	P_C min. 3.5 W

Table 3-15 Logic supply requirements

1) Use the following formula to calculate the required voltage under load.
2) Choose a power supply according to the calculated voltage. Thereby consider:
   a) During braking of the load, the power supply must be capable of buffering the recovered kinetic energy (for example, in a capacitor).
   b) If you are using an electronically stabilized power supply, make sure that the overcurrent protection circuit is configured inoperative within the operating range.
   c) The maximal power supply voltage $+V_{CC}$ must be equal or greater than the holding brake supply voltage.

The formula already takes the following into account:
- *Maximum PWM duty cycle of 90%*
- *Controller's max. voltage drop of 1 V @ 8 A*

KNOWN VALUES:
- Operating torque M [mNm]
- Operating speed n [rpm]
- Nominal motor voltage U_N [Volt]
- Motor no-load speed at U_N; n_O [rpm]
- Speed/torque gradient of the motor $\Delta n/\Delta M$ [rpm/mNm]

SOUGHT VALUE:
- Supply voltage $+V_{CC}$ [Volt]

SOLUTION:

$$V_{CC} \geq \left[\frac{U_N}{n_O} \cdot \left(n + \frac{\Delta n}{\Delta M} \cdot M\right) \cdot \frac{1}{0.9}\right] + 1[V]$$

3.3.2 Motor (X3)

The controller is set to drive either a maxon DC motor (brushed DC motor) or maxon EC motor (BLDC, brushless DC motor).

Danger of confusion
*Note that **both connectors X3** (Motor) **and X1/X2** (Power & Logic Supply) **are of identical type**. Make sure not to interchange them.*

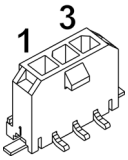

Figure 3-9 Motor connector X3

X3 Pin	Signal	Description
1	Motor (+M)	DC motor: Motor +
2	Motor (−M)	DC motor: Motor −
3	–	not connected

Table 3-16 Motor connector X3 – Pin assignment for maxon DC motor

X3 Pin	Signal	Description
1	Motor winding 1	EC motor: Winding 1
2	Motor winding 2	EC motor: Winding 2
3	Motor winding 3	EC motor: Winding 3

Table 3-17 Motor connector X3 – Pin assignment for maxon EC motor

Connector X3		
Suitable cable	➔Power & Motor Cable on page 3-40	
Suitable plug	Housing	Molex Micro-Fit (0436450300)
	Contact	Molex Micro-Fit (0430300038)

Table 3-18 Motor connector X3 – Specifications

3.3.3 Hall Sensor (X4)

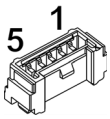

Figure 3-10 Hall sensor connector X4

X4 Pin	Signal	Description
1	Hall sensor 1	Hall sensor 1 input
2	Hall sensor 2	Hall sensor 2 input
3	Hall sensor 3	Hall sensor 3 input
4	GND	Ground
5	V_{Sensor}	Sensor supply voltage (+5 VDC; I_L ≤100 mA)

Table 3-19 Hall sensor connector – Pin assignment

Connector X4		
Suitable cable	➔Hall Sensor Cable on page 3-40	
Suitable plug	Housing	Molex Micro-Lock (05055650501)
	Contact	Molex Micro-Lock (05054311000) AWG26…30

Table 3-20 Hall sensor connector – Specifications

Hall sensor	
Sensor supply voltage (V_{Sensor})	+5 VDC
Max. Hall sensor supply current	30 mA
Input voltage	0…24 VDC
Max. input voltage	+24 VDC
Logic 0	typically <0.8 V
Logic 1	typically >2.0 V
Internal pull-up resistor	2.7 kΩ (referenced to +5.45 V - 0.6 V)

Table 3-21 Hall sensor specification

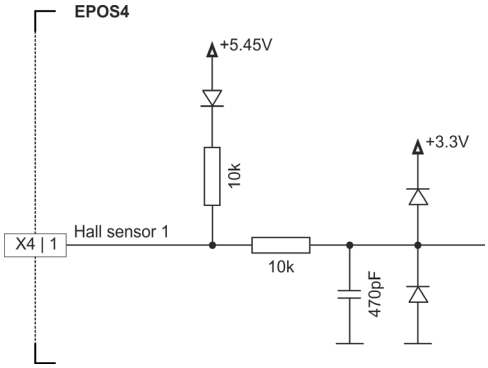

Figure 3-11 Hall sensor 1 input circuit (analogously valid for Hall sensors 2 & 3)

3.3.4 Encoder (X5)

Best practice

- *Differential signals offer good resistance against electrical interference. Therefore,* ***we recommend using a differential scheme****. Nevertheless, the controller supports both schemes – differential and single-ended (unsymmetrical).*
- *For best performance,* ***we strongly recommend to use encoders with a line driver****. Otherwise, limitations may apply due to slow switching edges.*
- *Even though 2-channel will do,* ***we strongly recommend to use only 3-channel versions****.*

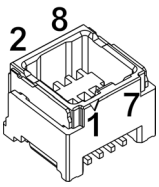

Figure 3-12 Encoder connector X5

X5 Pin	Signal	Description
1	Channel A	Channel A
2	Channel A\	Channel A complement
3	Channel B	Channel B
4	Channel B\	Channel B complement
5	Channel I	Channel I
6	Channel I\	Channel I complement
7	GND	Ground
8	V_{Sensor}	Sensor supply voltage (+5 VDC; I_L ≤100 mA)

Table 3-22 Encoder connector X5 – Pin assignment

Connector X5		
Suitable cable	➔Encoder Cable on page 3-41	
Suitable plug	Housing	Molex Micro-Lock (05054320801)
	Contact	Molex Micro-Lock (05054311000) AWG26…30

Table 3-23 Encoder connector X5 – Specifications

Continued on next page.

Encoder (differential)	
Sensor supply voltage (V_{Sensor})	+5 VDC
Max. auxiliary supply current	≤70 mA
Min. differential input voltage	±200 mV
Max. input voltage	±12 VDC
Line receiver (internal)	EIA RS422 standard
Max. input frequency	6.25 MHz

Table 3-24 Differential encoder specification

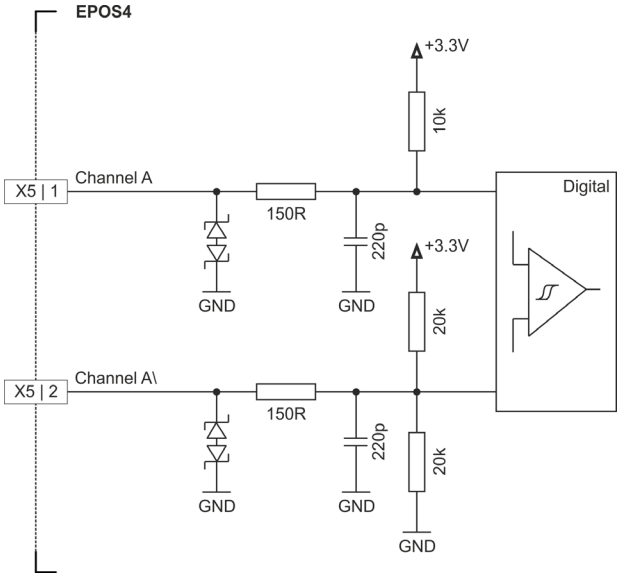

Figure 3-13 Encoder input circuit Ch A “differential” (analogously valid for Ch B & Ch I)

Continued on next page.

Encoder (single-ended)		
Sensor supply voltage (V_{Sensor})		+5 VDC
Max. auxiliary supply current		≤70 mA
Input voltage		0…5 VDC
Max. input voltage		±12 VDC
Logic 0		<1.0 V
Logic 1		>2.4 V
Input high current		typically +250 µA @ +5 VDC
Input low current		typically −330 µA @ 0 VDC
Max. input frequency	Push-pull	6.25 MHz
	Open collector	40 kHz (internal pull-up only 150 kHz (additional external 3k3 pull-up)

Table 3-25 Single-ended encoder specification

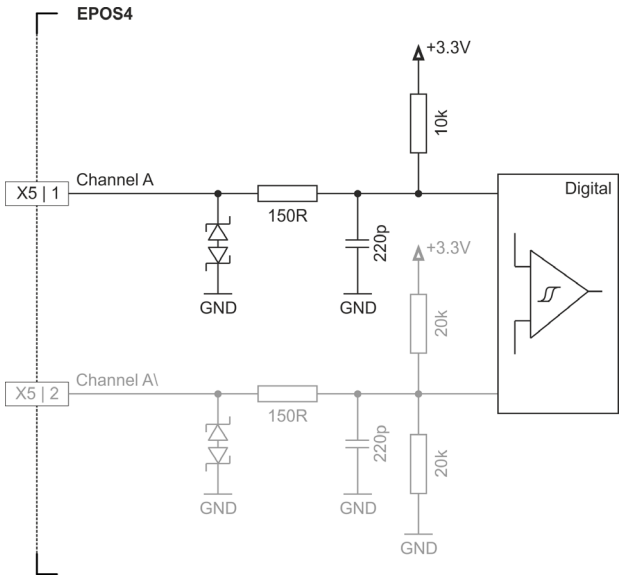

Figure 3-14 Encoder input circuit Ch A “single-ended” (analogously valid for Ch B & Ch I)

3.3.5 SSI (X6)

You may connect both incremental and serial encoders as additional sensors.

Check on the applied sensor's data sheet
If the specified inrush current or the maximum continuous current of the sensor should exceed 150 mA, you can connect the sensor supply voltage (V_{Sensor}) in parallel to the auxiliary output voltage (V_{Aux}).

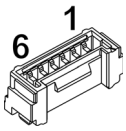

Figure 3-15 Sensor connector X6

X6 Pin	Signal	Description
1	Clock	Clock (SSI)
	HsDigOUT1	High-speed digital output 1
2	Clock\	Clock (SSI) complement
	HsDigOUT1\	High-speed digital output 1 complement
3	Data	Data (SSI)
	HsDigIn4	High-speed digital input 4
4	Data\	Data (SSI) complement
	HsDigIn4\	High-speed digital input 4 complement
5	GND	Ground
6	V_{Aux}	Auxiliary output voltage (+5 VDC; I_L ≤150 mA)

Table 3-26 Sensor connector X6 – Pin assignment

Connector X6		
Suitable cable	➔Sensor Cable 3x2core on page 3-41	
Suitable plug	Housing	Molex Micro-Lock (05055650601)
	Contact	Molex Micro-Lock (05054311000) AWG26…30

Table 3-27 Sensor connector X6 – Specifications

Continued on next page.

SSI absolute encoder	
Auxiliary output voltage (V_{Aux})	+5 VDC
Max. auxiliary supply current	150 mA
Min. differential input voltage	±200 mV
Min. differential output voltage	±1.8 V @ external load R=54 Ω
Max. output current	40 mA
Line receiver (internal)	EIA RS422 standard
Encoder input/output frequency	0.4… 2 MHz

Table 3-28 SSI absolute encoder specification

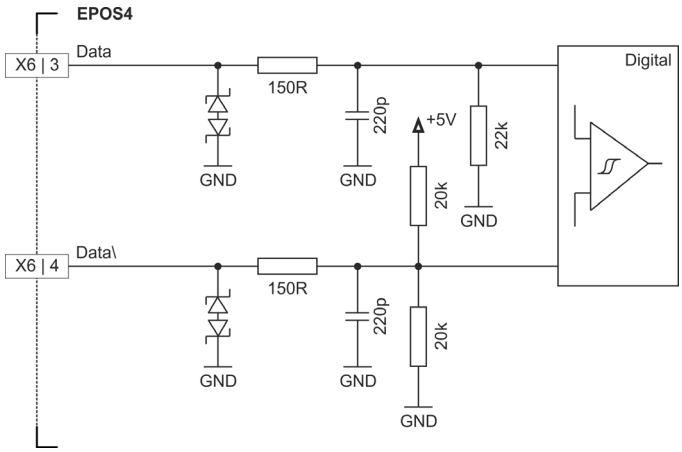

Figure 3-16 SSI absolute encoder data input (analogously valid for HsDigIn4)

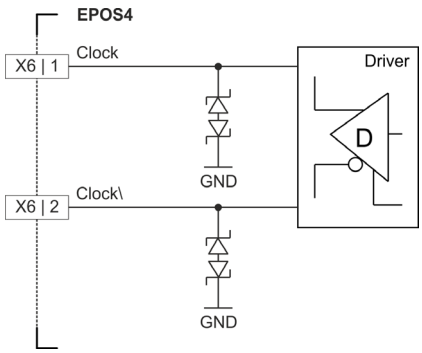

Figure 3-17 SSI absolute encoder clock output (analogously valid for HsDigOut1)

3.3.6 Digital I/O (X7)

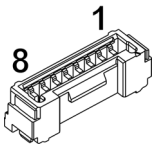

Figure 3-18 Digital I/O connector X7

X7 Pin	Signal	Description
1	DigIN1	Digital input 1
2	DigIN2	Digital input 2
3	DigIN3	Digital input 3
4	DigIN4	Digital input 4
5	DigOUT1	Digital output 1
6	DigOUT2	Digital output 2
7	GND	Ground
8	V_{Aux}	Auxiliary output voltage (+5 ; I_L ≤150 mA)

Table 3-29 Digital I/O connector X7 – Pin assignment

Connector X7		
Suitable cable	➔Signal Cable 8core on page 3-41	
Suitable plug	Housing	Molex Micro-Lock (05055650801)
	Contact	Molex Micro-Lock (05054311000) AWG26…30

Table 3-30 Digital I/O connector X7 – Specifications

Continued on next page.

Digital inputs 1…4	
Input voltage	0…36 VDC
Max. input voltage	±36 VDC
Logic 0	<0.8 V or floating
Logic 1	>2.1 V
Input resistance	typically 47 kΩ (<3.3 V) typically 37.5 kΩ (@ 5 VDC) typically 25.5 kΩ (@ 24 VDC)
Input current at logic 1	typically 135 µA @ 5 VDC
Switching delay	<300 µs

Table 3-31 Digital input 1…4 specification

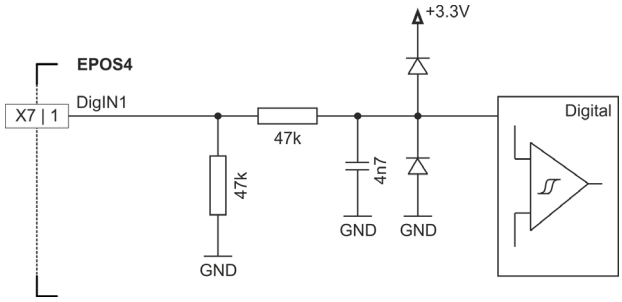

Figure 3-19 DigIN1 circuit (analogously valid for DigIN2…4)

Digital outputs 1 & 2	
Circuit	Open drain (internal pull-up resistor 2k2 and diode to +5.45 VDC

Table 3-32 Digital output specification

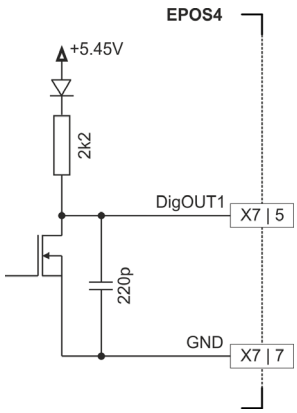

Figure 3-20 DigOUT1 circuit (analogously valid for DigOUT2)

Continued on next page.

WIRING EXAMPLES

Digital output 1 & 2 “sinks”	
Max. input voltage	36 VDC
Max. load current	500 mA
Max. voltage drop	0.5 V @ 500 mA
Max. load inductance	100 mH @ 24 VDC; 500 mA

Table 3-33 Digital output 1 & 2 specification – Sinks

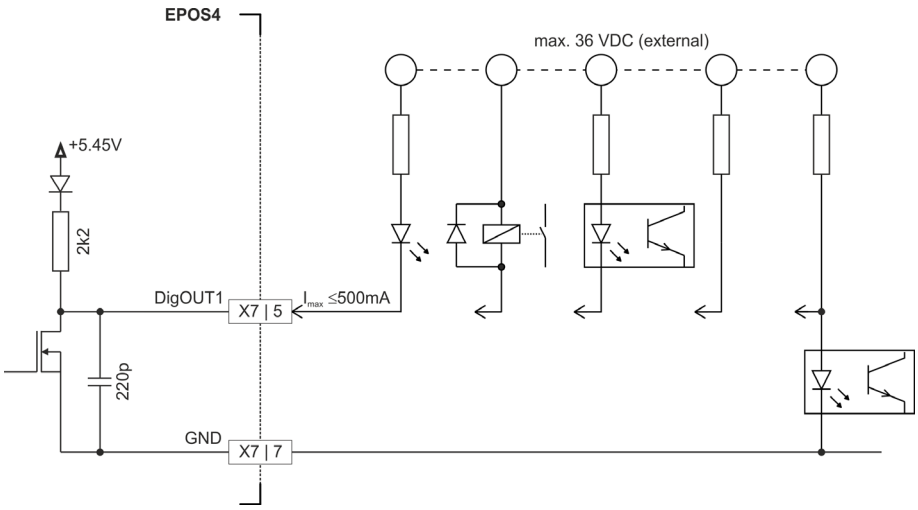

Figure 3-21 DigOUT1 “sinks” (analogously valid for DigOUT2)

Digital output 1 & 2 “source”	
Output voltage	U_{Out} = 5.45 V − 0.75 V − (I_{Load} x 2200 Ω)
Max. load current	I_{Load} ≤2 mA

Table 3-34 Digital output 1 & 2 specification – Source

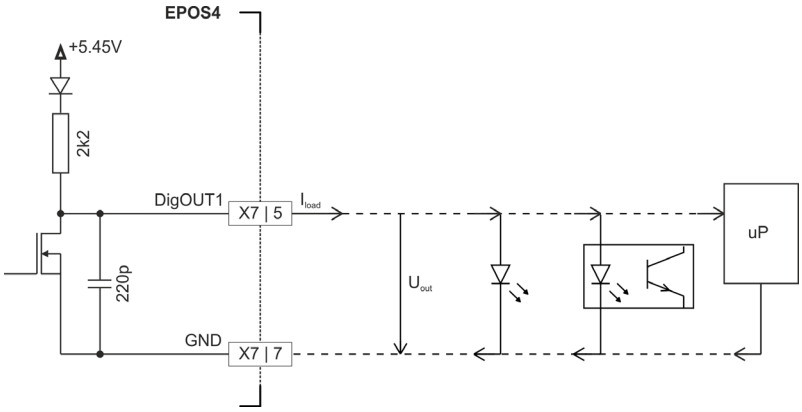

Figure 3-22 DigOUT1 “source” (analogously valid for DigOUT2)

3.3.7 Analog I/O (X8)

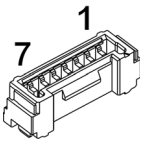

Figure 3-23 Analog I/O connector X8

X8 Pin	Signal	Description
1	AnIN1+	Analog input 1, positive signal
2	AnIN1−	Analog input 1, negative signal
3	AnIN2+	Analog input 2, positive signal
4	AnIN2−	Analog input 2, negative signal
5	AnOUT1	Analog output 1
6	—	not connected
7	GND	Ground

Table 3-35 Analog I/O connector X8 – Pin assignment

Connector X8		
Suitable cable	➔Signal Cable 7core on page 3-42	
Suitable plug	Housing	Molex Micro-Lock (05055650701)
	Contact	Molex Micro-Lock (05054311000) AWG26…30

Table 3-36 Analog I/O connector X8 – Specifications

Continued on next page.

Analog inputs 1…2	
Input voltage	±10 VDC (differential)
Max. input voltage	±24 VDC
Common mode voltage	−5…+10 VDC (referenced to GND)
Input resistance	80 kΩ (differential) 65 kΩ (referenced to GND)
A/D converter	12-bit
Resolution	5.64 mV
Bandwidth	10 kHz

Table 3-37 Analog input specification

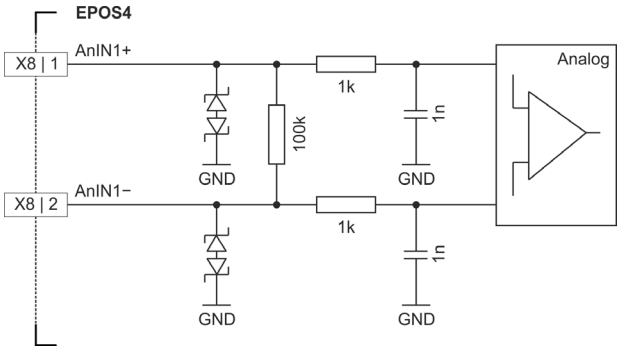

Figure 3-24 AnIN1 circuit (analogously valid for AnIN2)

Analog output 1	
Output voltage	±4 VDC
D/A converter	12-bit
Resolution	2.42 mV
Refresh rate	2.5 kHz
Analog bandwidth of output amplifier	25 kHz
Max. capacitive load	300 nF ***Note:*** *The increase rate is limited in proportion to the capacitive load (e.g. 5 V/ms @ 300 nF)*
Max. output current limit	1 mA

Table 3-38 Analog output specification

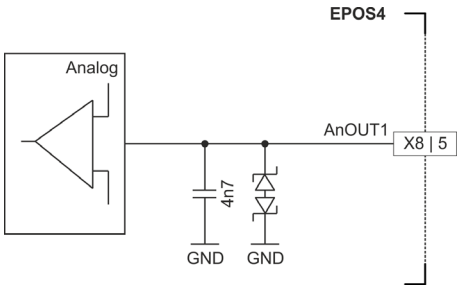

Figure 3-25 AnOUT1 circuit

3.3.8 USB (X13)

Hot plugging the USB interface may cause hardware damage

If the USB interface is being hot-plugged (connecting while the power supply is on), the possibly high potential differences of the two power supplies of controller and PC/Notebook can lead to damaged hardware.

- *Avoid potential differences between the power supply of controller and PC/Notebook or, if possible, balance them.*
- *Insert the USB connector first, then switch on the power supply of the controller.*

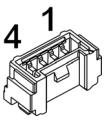

Figure 3-26 USB connector X13

X13 Pin	PC's USB Terminal Pin	Signal	Description
1	1	V_{Bus}	USB bus supply voltage input +5 VDC
2	2	USB_D−	USB Data− (twisted pair with Data+)
3	3	USB_D+	USB Data+ (twisted pair with Data−)
4	4	GND	USB ground

Table 3-39 USB connector X13 – Pin assignment

Connector X13		
Suitable cable	➔USB Type A-Micro-Lock Cable on page 3-42	
Suitable plug	Housing	Molex Micro-Lock (05055650401)
	Contact	Molex Micro-Lock (05054311000) AWG26…30

Table 3-40 USB connector X13 – Specifications

USB	
USB Standard	USB 2.0 / USB 3.0 (full speed)
Max. bus supply voltage	+5.25 VDC
Max. DC data input voltage	−0.5…+3.8 VDC

Table 3-41 USB interface specification

3.3.9 CAN IN (X14) & CAN OUT (X15)

The Disk CAN is specially designed being commanded and controlled via a Controller Area Network (CAN). It is preferably used as a slave node in the CANopen network.

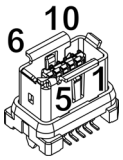

Figure 3-27 CAN 1 connector X14 / CAN 2 connector X15

X14 X15 Pin	Signal	Description
1	CAN high	CAN high bus line
2	CAN low	CAN low bus line
3	—	not connected
4	—	not connected
5	—	not connected
6	CAN V+	CAN external supply (device-internally not in use)
7	GND	Ground
8	—	not connected
9	—	not connected
10	—	not connected
—	Shield	Cable shield

Table 3-42 CAN 1 connector X14 / CAN 2 connector X15 – Pin assignment

Connector X14; X15	
Suitable cables	➔CAN-CAN Cable on page 3-42 ➔CAN-COM Cable on page 3-43
Suitable plugs	maxon (751388) (➔Table 3-10) or HARTING (09 45 181 9002 XL) or Hirose (IX31G-B-10S-CV(7.0))

Table 3-43 CAN 1 connector X14 / CAN 2 connector X15 – Specifications

Continued on next page.

CAN interface	
Standard	ISO 11898-2:2003
Max. bit rate	1 Mbit/s
Max. number of CAN nodes	127/31 (via software/hardware setting)
Protocol	CiA 301 version 4.2.0
Node-ID setting	By DIP switch or software

Table 3-44 CAN interface specification

Note

- *Consider the CAN master's maximal bit rate.*
- *The standard bit rate setting (factory setting) is 1 Mbit/s, automatic bit rate detection is set.*
- *Use 120 Ω termination resistor at both ends of the CAN bus.*
- *For detailed CAN information see separate document ➔«EPOS4 Communication Guide».*

3.3.10 EtherCAT IN (X14) & EtherCAT OUT (X15)

The Disk EtherCAT features two NET connectors for EtherCAT. One serves for NET input, the other for NET output. Both sockets are identical in respect to their external wiring.

Wrong plugging may cause hardware damage

Even though both NET sockets are prepared for identical external wiring, make sure to always connect them as follows.

- *Use IN (X14) as «Input».*
- *Use OUT (X15) as «Output».*

For detailed information see separate document ➔«EPOS4 Communication Guide».

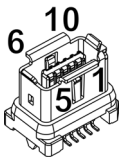

Figure 3-28 EtherCAT IN connector X14 / EtherCAT OUT connector X15

X14 X15 Pin	Signal	Description
1	TX+	Transmission Data+
2	TX−	Transmission Data−
3	—	not connected
4	—	not connected
5	—	not connected
6	RX+	Receive Data+
7	RX−	Receive Data−
8	—	not connected
9	—	not connected
10	—	not connected
—	Shield	Cable shield

Table 3-45 EtherCAT IN connector X14 / EtherCAT OUT connector X15 – Pin assignment

Connector X14; X15	
Suitable cables	➔EtherCAT-EtherCAT Cable on page 3-43 ➔EtherCAT-COM Cable on page 3-44
Suitable plug	maxon (748166) (➔Table 3-10) or HARTING (09 45 181 2562 XL) or Hirose (IX31G-A-10S-CV(7.0))

Table 3-46 EtherCAT IN connector X14 / EtherCAT OUT connector X15 – Specifications

3.3.11 Brake (X16)

The high-speed digital output 2 allows the time-controlled reduction of the brake voltage with PWM in order to reduce the power loss in the brake. For detailed information see separate document ➔«EPOS4 Firmware Specification».

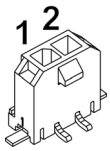

Figure 3-29 Brake connector X16

X16 Pin	Signal	Description
1	Brake+	Holding brake + (fused power supply voltage $+V_{CC}$)
2	Brake−	Holding Brake − (configurable open drain PWM output)

Table 3-47 Brake connector X16 – Pin assignment

Connector X16		
Suitable cable	➔Brake Cable on page 3-44	
Suitable plug	Housing	Molex Micro-Fit (0436450200)
	Contact	Molex Micro-Fit (0430300001) (0430300007) AWG20…24 Molex Micro-Fit (0430300004) (0430300010) AWG26…30

Table 3-48 Brake connector X16 – Specifications

Brake output	
V_{Brake} PWM frequency	25 kHz
V_{Brake} voltage	Max. $+V_{CC}$
V_{Brake} current	≤700 mA
Max. voltage drop (Brake− to GND)	0.15 V @ 700 mA

Table 3-49 Brake output specification

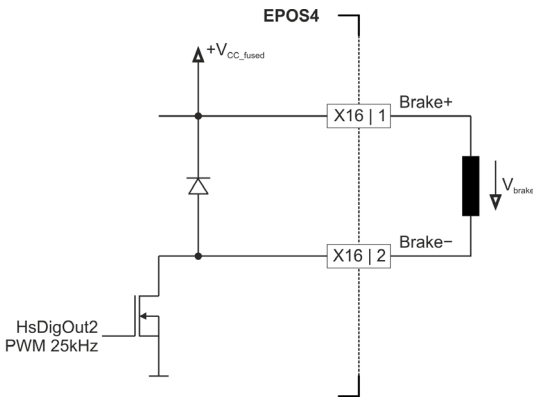

Figure 3-30 HsDigOut 2 (Holding Brake only) circuit

3.4 Prefab Cable Assemblies

Best practice
The actual connections you will need to establish depend on the overall configuration of your drive system, the type of controller, and the type of motor you will be using. Check on ➔chapter "4 Wiring" on page 4-51 for the prefab cable assemblies you will actually require in your setup.

This cable fits connectors…
➔X1/X2
➔X3

Power & Motor Cable (696283)		
A 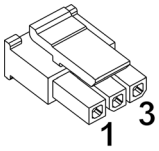 B		
Type / length	3 x 1 mm^2, shielded, grey / 3 m	
Wire identifier	Numbers 1 ¦¦ 2 ¦¦ 3	
Head A	Plug	Molex Micro-Fit (0436450300)
	Contacts	Molex Micro-Fit (0430300038)
Head B	Wire end sleeves 1 mm^2	

Table 3-50 Power & Motor Cable

This cable fits connector…
➔X4

Hall Sensor Cable (696284)		
A 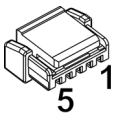 B		
Type / length	5 x 0.14 mm^2, shielded, grey / 3 m	
Wire identifier	Colors white ¦¦ brown ¦¦ green ¦¦ yellow ¦¦ grey	
Head A	Plug	Molex Micro-Lock (05055650501)
	Contacts	Molex Micro-Lock (05054311000)
Head B	Wire end sleeves 0.14 mm^2	

Table 3-51 Hall Sensor Cable

This cable fits connector…
➔X5

Encoder Cable (696285)		
A 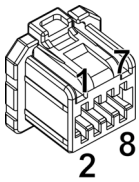 B		
Type / length	4 x 2 x 0.14 mm^2, twisted pair, non-shielded, grey / 3 m	
Wire identifier	Colors white ¦¦ brown ¦¦ green ¦¦ yellow ¦¦ grey ¦¦ pink ¦¦ blue ¦¦ red	
Head A	Plug	Molex Micro-Lock (05054320801)
	Contacts	Molex Micro-Lock (05054311000)
Head B	Wire end sleeves 0.14 mm^2	

Table 3-52 Encoder Cable

This cable fits connector…
➔X6

Sensor Cable 3x2core (696286)		
A 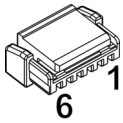 B		
Type / length	3 x 2 x 0.14 mm^2, twisted pair, non-shielded, grey / 3 m	
Wire identifier	Colors white ¦¦ brown ¦¦ green ¦¦ yellow ¦¦ grey ¦¦ pink	
Head A	Plug	Molex Micro-Lock (05055650601)
	Contacts	Molex Micro-Lock (05054311000)
Head B	Wire end sleeves 0.14 mm^2	

Table 3-53 Sensor Cable 3x2core

This cable fits connector…
➔X7

Signal Cable 8core (696287)		
A 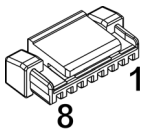 B		
Type / length	8 x 0.14 mm^2, non-shielded, grey / 3 m	
Wire identifier	Colors white ¦¦ brown ¦¦ green ¦¦ yellow ¦¦ grey ¦¦ pink ¦¦ blue ¦¦ red	
Head A	Plug	Molex Micro-Lock (05055650801)
	Contacts	Molex Micro-Lock (05054311000)
Head B	Wire end sleeves 0.14 mm^2	

Table 3-54 Signal Cable 8core

This cable fits connector…
➔X8

Signal Cable 7core (696288)		
A 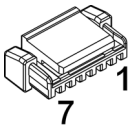 B		
Type / length	7 x 0.14 mm^2, non-shielded, grey / 3 m	
Wire identifier	Colors white ¦¦ brown ¦¦ green ¦¦ yellow ¦¦ grey ¦¦ pink ¦¦ blue	
Head A	Plug	Molex Micro-Lock (05055650701)
	Contacts	Molex Micro-Lock (05054311000)
Head B	Wire end sleeves 0.14 mm^2	

Table 3-55 Signal Cable 7core

This cable fits connector…
➔X13

USB Type A-Micro-Lock Cable (696289)		
A 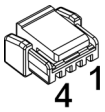 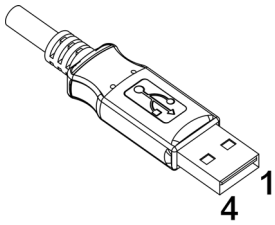 B		
Type / length	USB 2.0 / USB3.0 (full speed), black / 1.5 m	
Wire identifier	—	
Head A	Plug	Molex Micro-Lock (05055650401)
	Contacts	Molex Micro-Lock (05054311000)
Head B	Plug	Male USB A, straight

Table 3-56 USB Type A-Micro-Lock Cable

This cable fits Disk CAN's connectors…
➔X14
➔X15

CAN-CAN Cable (710931)		
A 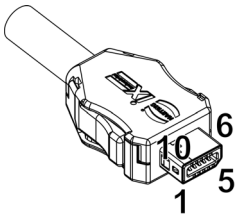 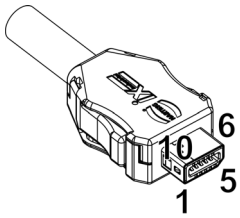 B		
Type / length	10 x AWG26, IEC61076-3-124, grey / 3 m [d]	
Wire identifier	Colors white ¦¦ brown ¦¦ green ¦¦ yellow ¦¦ grey ¦¦ pink ¦¦ blue ¦¦ red ¦¦ black ¦¦ violet	
Head A	HARTING ix Industrial, Type B (09 45 181 9002 XL)	
Head B	HARTING ix Industrial, Type B (09 45 181 9002 XL)	

[d] Alternative lengths are available from HARTING: 0.5 m (33 48 111 1A20 005); 1 m (33 48 111 1A20 010)

Table 3-57 CAN-CAN Cable

This cable fits Disk CAN's connectors…
➔X14
➔X15

CAN-COM Cable (710932)	
Type / length	10 x AWG26, IEC61076-3-124, grey / 3 m
Wire identifier	Colors white ¦¦ brown ¦¦ green ¦¦ yellow ¦¦ grey ¦¦ pink ¦¦ blue ¦¦ red ¦¦ black ¦¦ violet
Head A	HARTING ix Industrial, Type B (09 45 181 9002 XL)
Head B	D-SUB socket 9, female

Table 3-58 CAN-COM Cable

This cable fits Disk EtherCAT's connectors…
➔X14
➔X15

EtherCAT-EtherCAT Cable (710933)	
Type / length	4 x 2 x AWG28/7. Cat. 6A, yellow / 3 m [e]
Wire identifier	Colors white/orange ¦¦ orange ¦¦ n.c. ¦¦ blue ¦¦ white/blue ¦¦ white/green ¦¦ green ¦¦ n.c. ¦¦ white/brown ¦¦ brown
Head A	HARTING ix Industrial, Type A (09 45 181 2562 XL)
Head B	HARTING ix Industrial, Type A (09 45 181 2562 XL)

[e] Alternative lengths are available from HARTING: 0.5 m (09 48 262 6749 005); 1 m (09 48 262 6749 010)

Table 3-59 EtherCAT-EtherCAT Cable

This cable fits Disk EtherCAT's connectors…
➔X14
➔X15

EtherCAT-COM Cable (710934)	
Type / length	4 x 2 x AWG28/7. Cat. 6A, yellow / 3 m [f]
Wire identifier	Colors white/orange ¦¦ orange ¦¦ n.c. ¦¦ blue ¦¦ white/blue ¦¦ white/green ¦¦ green ¦¦ n.c. ¦¦ white/brown ¦¦ brown
Head A	HARTING ix Industrial, Type A (09 45 181 2562 XL)
Head B	RJ45

[f] Alternative lengths are available from HARTING: 0.5 m (09 48 261 2749 005); 1 m (09 48 261 2749 010)

Table 3-60 EtherCAT-COM Cable

This cable fits connector…
➔X16

Brake Cable (710928)		
Type / length	2 x 0.5 mm^2, shielded, grey / 3 m	
Wire identifier	Numbers 1 ¦¦ 2	
Head A	Plug	Molex Micro-Fit (0436450200)
	Contacts	Molex Micro-Fit (0430300001) (0430300007)
Head B	Wire end sleeves 0.5 mm^2	

Table 3-61 Brake Cable

3.5 DIP Switch Configuration (SW1)

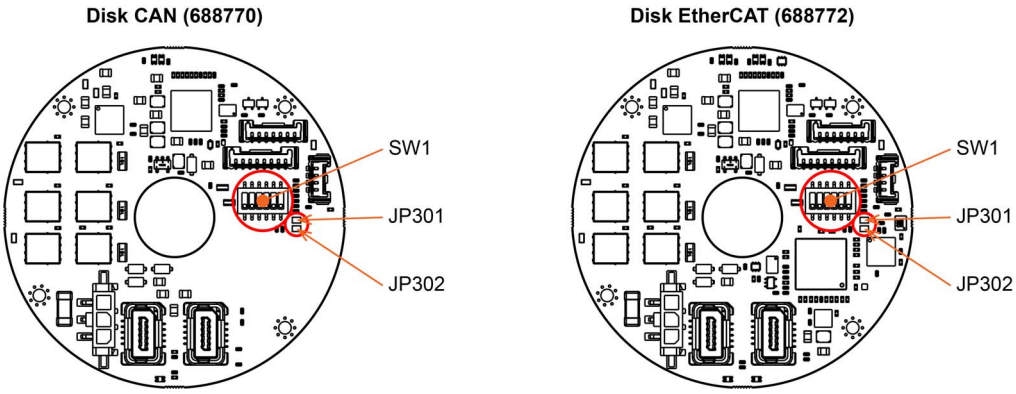

Figure 3-31 DIP switch SW1 and solder pads – Location

3.5.1 CAN ID (Node-ID) / DEV ID

The device's identification (subsequently called "ID") is set by means of DIP switches 1…4 and, additionally, by shortening the solder pads JP301 and JP302. The ID (1…63) may be coded using binary code.

Setting the ID by DIP switch SW1 and solder pads JP301, JP 302

- *By setting the DIP switch (1…4) address 0 ("OFF"), the ID may be set by software (object 0x2000 «Node-ID», range 1…127).*
- *The ID results in the summed values of DIP switch addresses 1 ("ON") and shorted solder pads JP301 and JP 302.*
- *DIP switches 5 and 6 do not have any impact on the ID.*

Setting	Switch	Binary Code	Valence
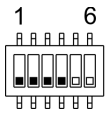 (factory setting)*	1	2^0	1
	2	2^1	2
	3	2^2	4
	4	2^3	8
	JP301 closed	2^4	16
	JP302 closed	2^5	32

* the default setting for the solder pads JP301, JP302 is "open"

Table 3-62 DIP switch SW1 – Binary code values

Continued on next page.

The set ID can be observed by adding the valence of all activated switches. Use the following table as a (non-concluding) guide:

Setting	Switch				Solder pad		ID
	1	2	3	4	JP301	JP302	
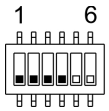 ON OFF	0	0	0	0	0	0	–
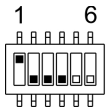 ON OFF	**1**	0	0	0	0	0	1
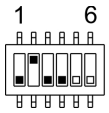 ON OFF	0	**1**	0	0	0	0	2
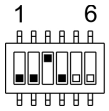 ON OFF	0	0	**1**	0	0	0	4
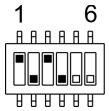 ON OFF	**1**	0	**1**	0	0	0	5
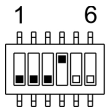 ON OFF	0	0	0	**1**	0	0	8
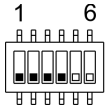 ON OFF JP301 closed	0	0	0	0	**1**	0	16
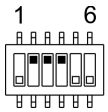 ON OFF JP302 closed	0	**1**	**1**	**1**	0	**1**	30
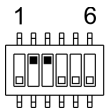 ON OFF JP301 JP302 closed	0	**1**	**1**	0	**1**	**1**	54
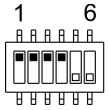 ON OFF JP301 JP302 closed	**1**	**1**	**1**	**1**	**1**	**1**	63
0 = Switch “OFF” / solder pad “open” 1 = Switch “ON” / solder pad “shorted”							

Table 3-63 DIP switch SW1 – Examples

3.5.2 CAN automatic Bit Rate Detection

Switch	OFF	ON
5	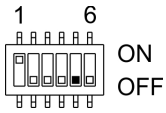 Automatic bit rate detection deactivated (factory setting, default 1 Mbit/s)	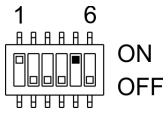 Automatic bit rate detection activated

Table 3-64 DIP switch SW1 – CAN automatic bit rate detection

3.5.3 CAN Bus Termination

Switch	OFF	ON
6	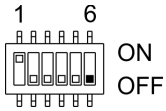 Without bus termination (factory setting)	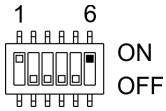 Bus termination with 120 Ω

Table 3-65 DIP switch SW1 – CAN bus termination

3.6 Status Indicators

The EPOS4 features three sets of LED indicators to display the device condition.

- **A** **NET Status**; the LEDs display communication RUN states and errors conditions
- **B** **Device Status**; the LEDs display the device's operation status and error conditions
- **C** **NET Port**; the LED displays the NET link activity

For detailed information see separate document ➔«EPOS4 Firmware Specification».

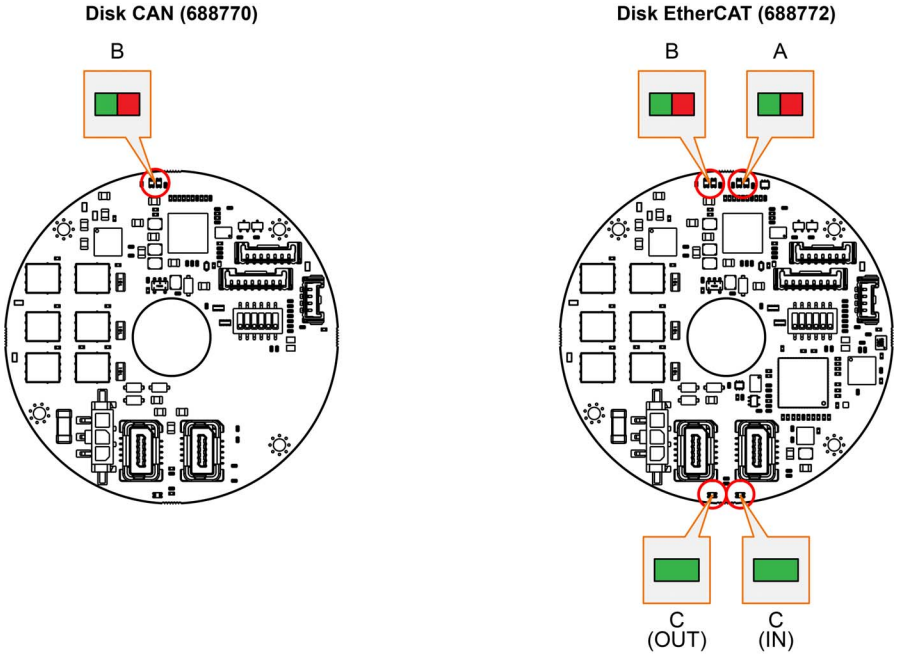

Figure 3-32 LEDs – Location

3.6.1 NET Status

The LEDs (➔Figure 3-32; **A**) display the actual status and possible errors of the EPOS4 in respect to the NET network:

- Green LED shows the RUN state
- Red LED indicates errors

LED		Description
Green	Red	
OFF	—	EPOS4 is in state INIT
Blink	—	EPOS4 is in state PRE-OPERATIONAL
Single flash	—	EPOS4 is in state SAFE-OPERATIONAL
ON	—	EPOS4 is in state OPERATIONAL
Flicker	—	EPOS4 is in state BOOTSTRAP
—	OFF	EPOS4 is in operating condition
—	Double flash	An application watchdog timeout has occurred *Example: Timeout of Sync Manager Watchdog*
—	Single flash	EPOS4 has changed the COM state due to an internal error *Example: Change of state "Op" to "SafeOpError" due to Sync Error*
—	Blink	General Configuration Error *Example: State change commanded by master is not possible due to actual settings (register, object, hardware configuration)*
Blink = continuous blinking (≈2.5 Hz) Flash = flashing (≈0.2 s), followed by pause of 1 s Flicker = continuous flickering (≈10 Hz)		

Table 3-66 NET Status LEDs

3.6.2 Device Status

The LEDs (➔Figure 3-32; **B**) display the actual status and possible errors of the EPOS4:

- Green LED shows the status
- Red LED indicates errors

LED		Description
Green	Red	
Slow	OFF	Power stage is disabled. The EPOS4 is in status… • "Switch ON Disabled" • "Ready to Switch ON" • "Switched ON"
ON	OFF	Power stage is enabled. The EPOS4 is in status… • "Operation Enable" • "Quick Stop Active"
OFF	ON	FAULT state. The EPOS4 is in status… • "Fault"
ON	ON	Power stage is enabled. The EPOS4 is in temporary status… • "Fault Reaction Active"
Flash	ON	No valid firmware or firmware download in progress
Flash = flashing (≈0.9 s OFF/≈0.1 s ON) Slow = slow blinking (≈1 Hz)		

Table 3-67 Device Status LEDs

3.6.3 NET Port

The LED (➔Figure 3-32; **C**) displays the link activity of the NET port (applies for both ports, X14 “IN” and X15 “OUT”):

- Green LED indicates link activity

LED Green	Description
OFF	Port is closed
Flicker	Port is open / activity is present
ON	Port is open
—	Data rate is 100 Mbit/s
Flicker = continuous flickering (≈10 Hz)	

Table 3-68 NET Port LED

4 WIRING

In this section you will find the wiring information for the setup you are using. You can either use the consolidated wiring diagrams (➔Figure 4-34 and Figure 4-35) featuring the full scope of interconnectivity and pin assignment. Or you may wish to use the connection overviews for either DC motor or EC (BLDC) motor that will assist you in determining the wiring for your particular motor type and the appropriate feedback signals.

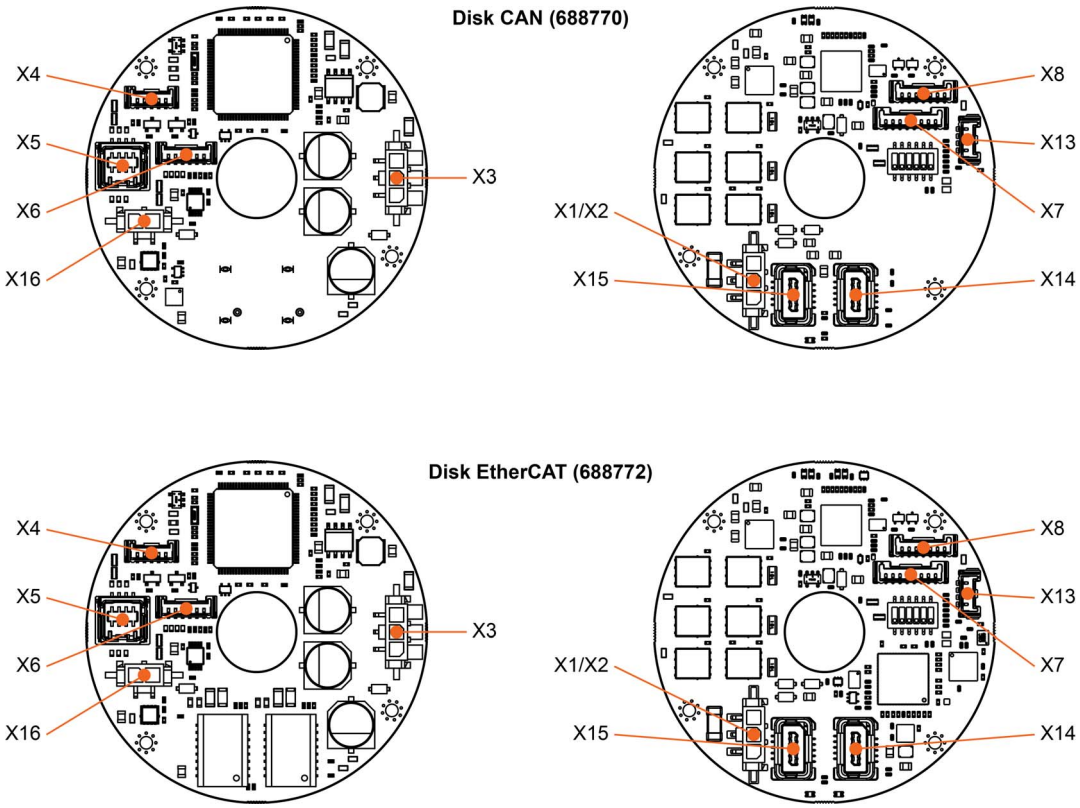

Figure 4-33 Interfaces – Designations and location

Signs and abbreviations used

The subsequent diagrams feature these signs and abbreviations:

- *«EC Motor» stands for brushless EC motor (BLDC).*
- ⏚ *Ground safety earth connection (optional).*

4.1 Possible Combinations to connect a Motor

The following tables show feasible ways on how to connect the motor with its respective feedback signals or possible combinations thereof. To find the wiring that best suits your setup, proceed as follows:

1) Decide on the type of motor you are using; either DC or EC (BLDC) motor.
2) Connect the power supply and the logic supply by following the link to the stated figure.
3) Check-out the listing for the combination that best suits your setup. Pick the wiring method # and go to the respective table; for DC motor ➔Table 4-69, for EC (BLDC) motor ➔Table 4-70.
4) Pick the row with the corresponding wiring method # and follow the link (or links) to the stated figure(s) to find the relevant wiring information.

4.1.1 DC Motor

Power supply & optional logic supply . . . . . .Figure 4-36

Motor & feedback signals

Without sensor . . . . . Method # DC1

Digital incremental encoder . . . . . Method # DC2

SSI absolute encoder. . . . . Method # DC3

Digital incremental encoder & SSI absolute encoder. . . . . Method # DC4

Method #	Digital Incremental Encoder (Sensor 1) X5	SSI Absolute Encoder (Sensor 2) X6	➔ Figure(s)
DC1			4-37
DC2	✓		4-37 4-40
DC3		✓	4-37 4-41
DC4	✓	✓	4-37 4-40 / 4-41

Table 4-69 Possible combinations of feedback signals for DC motor

4.1.2 EC (BLDC) Motor

Power supply & optional logic supply . . . . . Figure 4-36

Motor & feedback signals

Hall sensors . . . . . Method # EC1

Hall sensors & Digital incremental encoder . . . . . Method # EC2

Hall sensors & SSI absolute encoder . . . . . Method # EC3

Hall sensors & Digital incremental encoder & SSI absolute encoder . . . . . Method # EC4

SSI absolute encoder . . . . . Method # EC5

Method #	Hall sensors (Sensor 3) X4	Digital Incremental Encoder (Sensor 1) X5	SSI Absolute Encoder (Sensor 2) X6	➔ Figure(s)
EC1	✓			4-38 4-39
EC2	✓	✓		4-38 4-39 / 4-40
EC3	✓		✓	4-38 4-39 / 4-41
EC4	✓	✓	✓	4-38 4-39 / 4-40 / 4-41
EC5			✓	4-38 4-41

Table 4-70 Possible combinations of feedback signals for EC (BLDC) motor

4.2 Main Wiring Diagrams

EPOS4 Disk 60/8 CAN

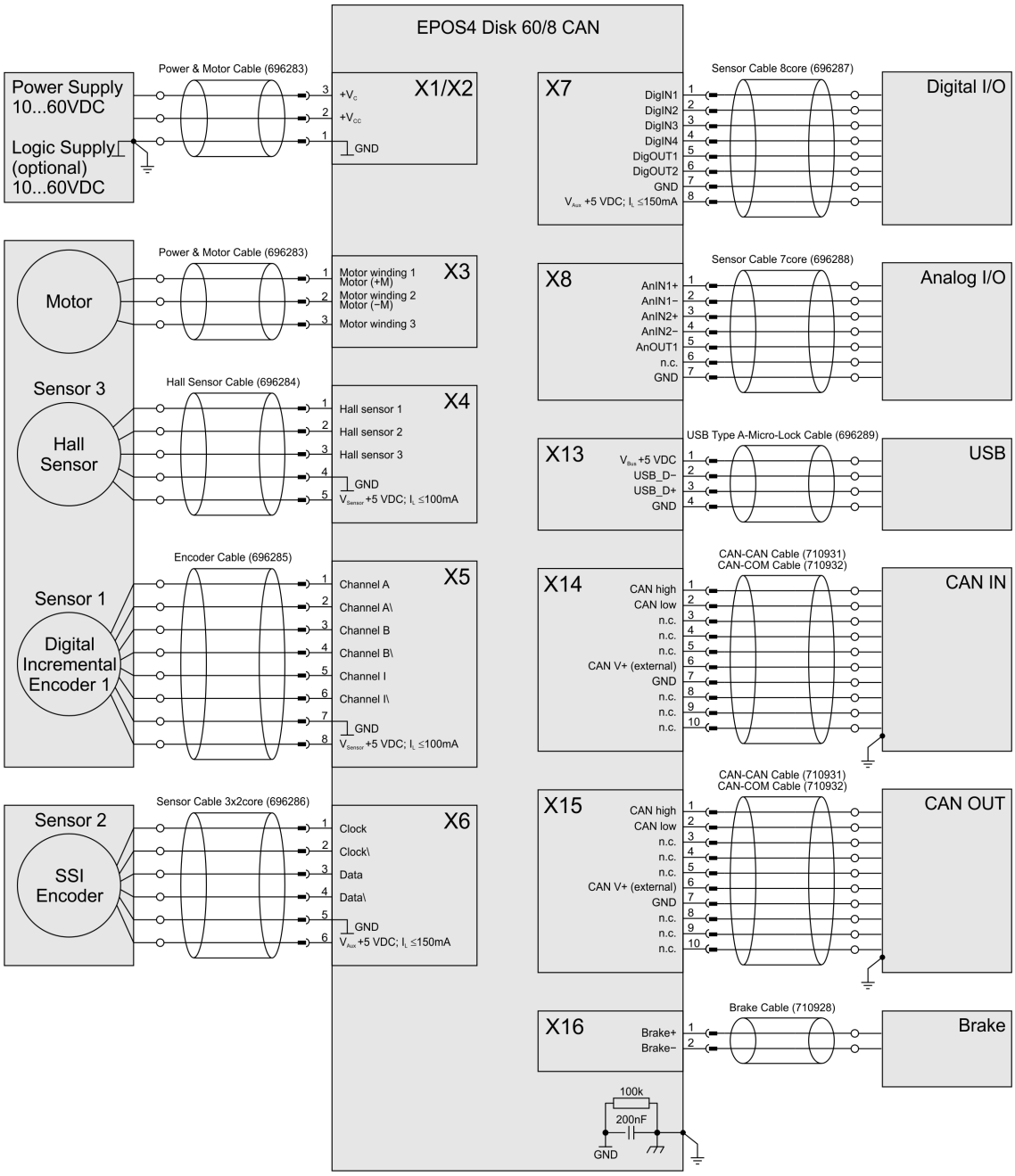

Figure 4-34 EPOS4 Disk 60/8 CAN – Main wiring diagram

EPOS4 Disk 60/8 EtherCAT

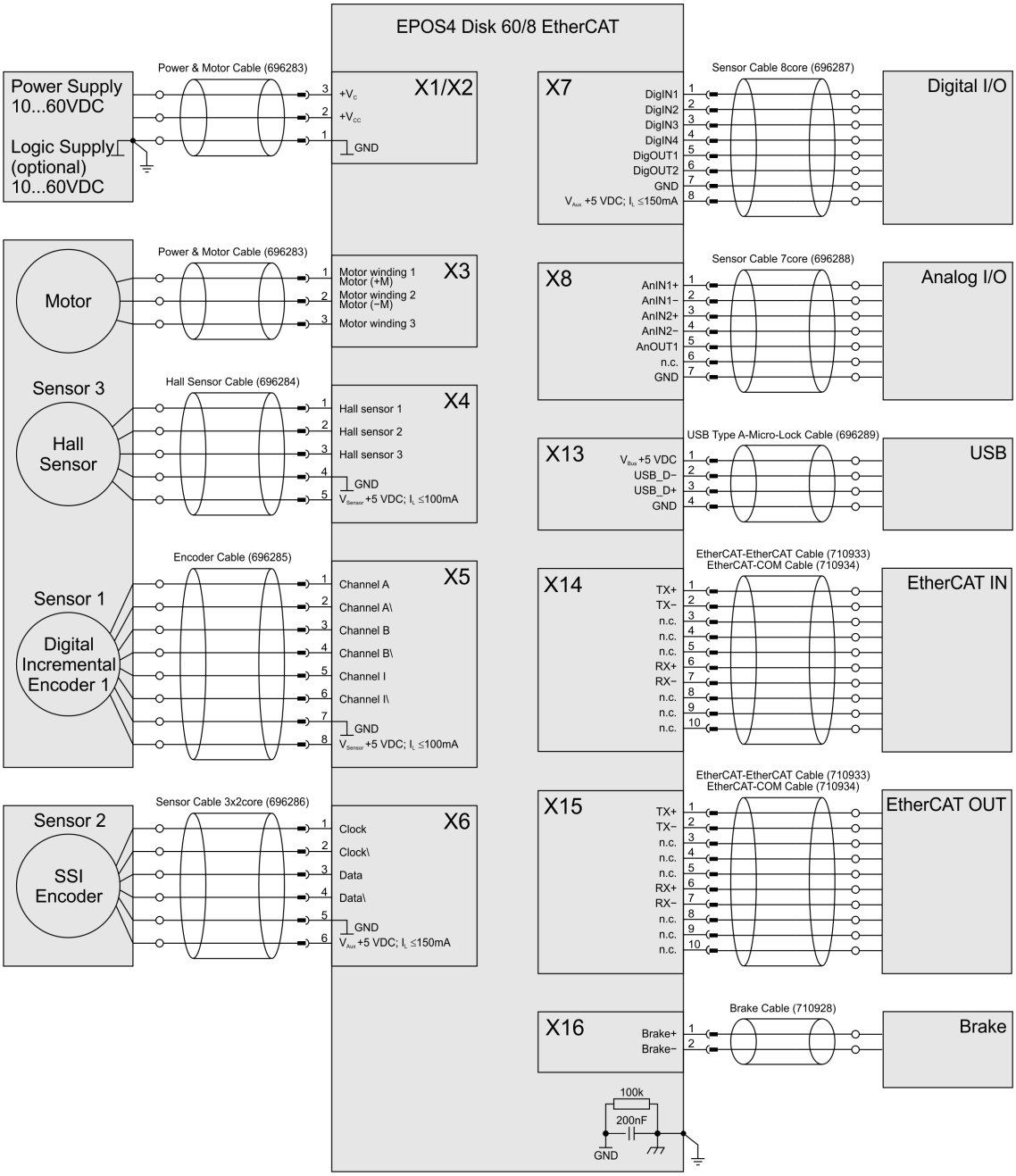

Figure 4-35 EPOS4 Disk 60/8 EtherCAT – Main wiring diagram

4.3 Excerpts

4.3.1 Power & Logic Supply

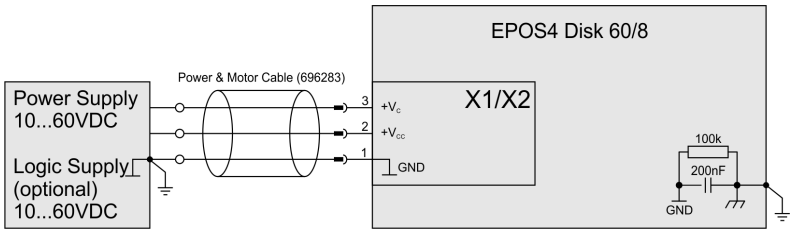

Figure 4-36 Power & logic supply

4.3.2 DC Motor

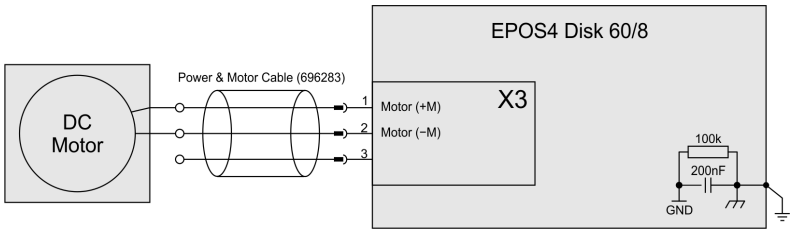

Figure 4-37 DC motor

4.3.3 EC (BLDC) Motor

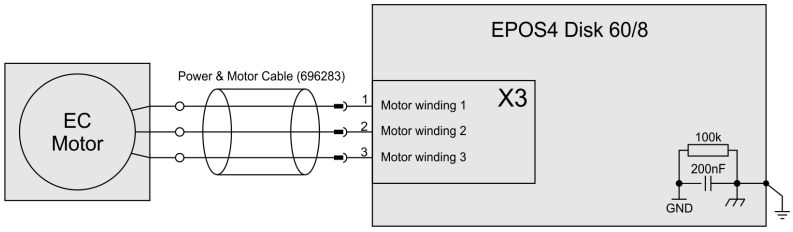

Figure 4-38 EC (BLDC) motor

4.3.4 Hall Sensors (Sensor 3)

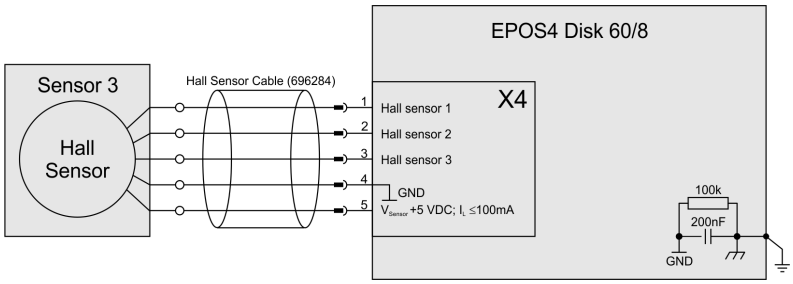

Figure 4-39 Hall sensors (Sensor 3)

4.3.5 Digital Incremental Encoder (Sensor 1)

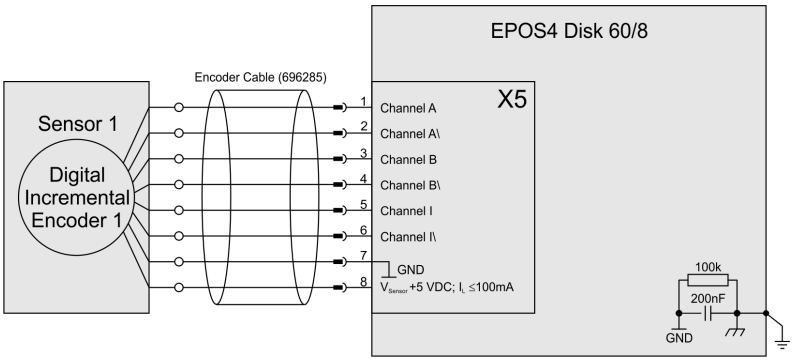

Figure 4-40 Digital incremental encoder (Sensor 1)

4.3.6 SSI Encoder (Sensor 2)

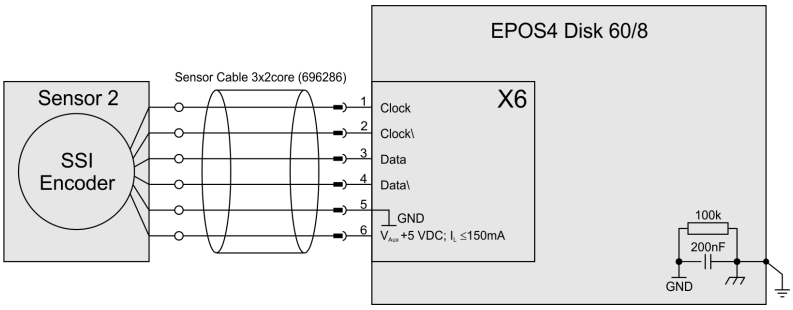

Figure 4-41 SSI encoder (Sensor 2)

••page intentionally left blank••

LIST OF FIGURES

Figure 1-1 Documentation structure . . . 5
Figure 2-2 Derating of output current . . . 13
Figure 2-3 Power dissipation and efficiency . . . 14
Figure 2-4 EPOS4 Disk 60/8 CAN – Dimensional drawing [mm] . . . 15
Figure 2-5 EPOS4 Disk 60/8 EtherCAT – Dimensional drawing [mm] . . . 15
Figure 3-6 EPOS4 Disk 60/8 CAN – Connectors . . . 20
Figure 3-7 EPOS4 Disk 60/8 EtherCAT – Connectors . . . 20
Figure 3-8 Power and logic supply combo connector X1/X2 . . . 21
Figure 3-9 Motor connector X3 . . . 23
Figure 3-10 Hall sensor connector X4 . . . 24
Figure 3-11 Hall sensor 1 input circuit (analogously valid for Hall sensors 2 & 3) . . . 24
Figure 3-12 Encoder connector X5 . . . 25
Figure 3-13 Encoder input circuit Ch A “differential” (analogously valid for Ch B & Ch I) . . . 26
Figure 3-14 Encoder input circuit Ch A “single-ended” (analogously valid for Ch B & Ch I) . . . 27
Figure 3-15 Sensor connector X6 . . . 28
Figure 3-16 SSI absolute encoder data input (analogously valid for HsDigIn4) . . . 29
Figure 3-17 SSI absolute encoder clock output (analogously valid for HsDigOut1) . . . 29
Figure 3-18 Digital I/O connector X7 . . . 30
Figure 3-19 DigIN1 circuit (analogously valid for DigIN2…4) . . . 31
Figure 3-20 DigOUT1 circuit (analogously valid for DigOUT2) . . . 31
Figure 3-21 DigOUT1 “sinks” (analogously valid for DigOUT2) . . . 32
Figure 3-22 DigOUT1 “source” (analogously valid for DigOUT2) . . . 32
Figure 3-23 Analog I/O connector X8 . . . 33
Figure 3-24 AnIN1 circuit (analogously valid for AnIN2) . . . 34
Figure 3-25 AnOUT1 circuit . . . 34
Figure 3-26 USB connector X13 . . . 35
Figure 3-27 CAN 1 connector X14 / CAN 2 connector X15 . . . 36
Figure 3-28 EtherCAT IN connector X14 / EtherCAT OUT connector X15 . . . 38
Figure 3-29 Brake connector X16 . . . 39
Figure 3-30 HsDigOut 2 (Holding Brake only) circuit . . . 39
Figure 3-31 DIP switch SW1 and solder pads – Location . . . 45
Figure 3-32 LEDs – Location . . . 48
Figure 4-33 Interfaces – Designations and location . . . 51
Figure 4-34 EPOS4 Disk 60/8 CAN – Main wiring diagram . . . 54
Figure 4-35 EPOS4 Disk 60/8 EtherCAT – Main wiring diagram . . . 55
Figure 4-36 Power & logic supply . . . 56
Figure 4-37 DC motor . . . 56
Figure 4-38 EC (BLDC) motor . . . 56
Figure 4-39 Hall sensors (Sensor 3) . . . 56
Figure 4-40 Digital incremental encoder (Sensor 1) . . . 57
Figure 4-41 SSI encoder (Sensor 2) . . . 57

LIST OF TABLES

Table 1-1 Notation used . . . 6
Table 1-2 Symbols and signs . . . 6
Table 1-3 Brand names and trademark owners . . . 7
Table 1-4 Abbreviations . . . 8
Table 2-5 Technical data . . . 12
Table 2-6 Limitations . . . 14
Table 2-7 Standards . . . 16
Table 3-8 Prefab maxon cables . . . 18
Table 3-9 EPOS4 Disk Connector Set – Content . . . 19
Table 3-10 EPOS4 Disk Communication Plugs . . . 19
Table 3-11 Recommended tools . . . 19
Table 3-12 Power and logic supply combo connector X1/X2 – Pin assignment . . . 21
Table 3-13 Power and logic supply combo connector X1/X2 – Specifications . . . 21
Table 3-14 Power supply requirements . . . 22
Table 3-15 Logic supply requirements . . . 22
Table 3-16 Motor connector X3 – Pin assignment for maxon DC motor . . . 23
Table 3-17 Motor connector X3 – Pin assignment for maxon EC motor . . . 23
Table 3-18 Motor connector X3 – Specifications . . . 23
Table 3-19 Hall sensor connector – Pin assignment . . . 24
Table 3-20 Hall sensor connector – Specifications . . . 24
Table 3-21 Hall sensor specification . . . 24
Table 3-22 Encoder connector X5 – Pin assignment . . . 25
Table 3-23 Encoder connector X5 – Specifications . . . 25
Table 3-24 Differential encoder specification . . . 26
Table 3-25 Single-ended encoder specification . . . 27
Table 3-26 Sensor connector X6 – Pin assignment . . . 28
Table 3-27 Sensor connector X6 – Specifications . . . 28
Table 3-28 SSI absolute encoder specification . . . 29
Table 3-29 Digital I/O connector X7 – Pin assignment . . . 30
Table 3-30 Digital I/O connector X7 – Specifications . . . 30
Table 3-31 Digital input 1…4 specification . . . 31
Table 3-32 Digital output specification . . . 31
Table 3-33 Digital output 1 & 2 specification – Sinks . . . 32
Table 3-34 Digital output 1 & 2 specification – Source . . . 32
Table 3-35 Analog I/O connector X8 – Pin assignment . . . 33
Table 3-36 Analog I/O connector X8 – Specifications . . . 33
Table 3-37 Analog input specification . . . 34
Table 3-38 Analog output specification . . . 34
Table 3-39 USB connector X13 – Pin assignment . . . 35
Table 3-40 USB connector X13 – Specifications . . . 35
Table 3-41 USB interface specification . . . 35

Table 3-42 CAN 1 connector X14 / CAN 2 connector X15 – Pin assignment . . . 36
Table 3-43 CAN 1 connector X14 / CAN 2 connector X15 – Specifications . . . 36
Table 3-44 CAN interface specification . . . 37
Table 3-45 EtherCAT IN connector X14 / EtherCAT OUT connector X15 – Pin assignment . . . 38
Table 3-46 EtherCAT IN connector X14 / EtherCAT OUT connector X15 – Specifications . . . 38
Table 3-47 Brake connector X16 – Pin assignment . . . 39
Table 3-48 Brake connector X16 – Specifications. . . . 39
Table 3-49 Brake output specification . . . 39
Table 3-50 Power & Motor Cable . . . 40
Table 3-51 Hall Sensor Cable . . . 40
Table 3-52 Encoder Cable. . . . 41
Table 3-53 Sensor Cable 3x2core. . . . 41
Table 3-54 Signal Cable 8core . . . 41
Table 3-55 Signal Cable 7core . . . 42
Table 3-56 USB Type A-Micro-Lock Cable . . . 42
Table 3-57 CAN-CAN Cable . . . 42
Table 3-58 CAN-COM Cable. . . . 43
Table 3-59 EtherCAT-EtherCAT Cable . . . 43
Table 3-60 EtherCAT-COM Cable. . . . 44
Table 3-61 Brake Cable. . . . 44
Table 3-62 DIP switch SW1 – Binary code values . . . 45
Table 3-63 DIP switch SW1 – Examples. . . . 46
Table 3-64 DIP switch SW1 – CAN automatic bit rate detection. . . . 47
Table 3-65 DIP switch SW1 – CAN bus termination . . . 47
Table 3-66 NET Status LEDs . . . 49
Table 3-67 Device Status LEDs . . . 49
Table 3-68 NET Port LED . . . 50
Table 4-69 Possible combinations of feedback signals for DC motor . . . 52
Table 4-70 Possible combinations of feedback signals for EC (BLDC) motor . . . 53

INDEX

A

abbreviations used *8*
alerts *6*
analog inputs *34*
analog outputs *34*
applicable EU directive *17*
applicable regulations *9*

B

bit rate detection *47*
bit rate, default *37*

C

cables (prefab)
- Brake Cable *44*
- CAN-CAN Cable *42*
- CAN-COM Cable *43*
- Encoder Cable *41*
- EtherCAT-COM Cable *44*
- EtherCAT-EtherCAT Cable *43*
- Hall Sensor Cable *40*
- Power & Motor Cable *40*
- Sensor Cable 3x2core *41*
- Signal Cable 7core *42*
- Signal Cable 8core *41*
- USB Type A - Micro-Lock Cable *42*

CAN bus termination *37*, *47*
CAN ID (see “ID”)
CAN interface *37*
connectors
- X1/X2 *21*
- X3 *23*
- X4 *24*
- X5 *25*
- X6 *28*
- X7 *30*
- X8 *33*
- X13 *35*
- X14 (CAN) *36*
- X14 (EtherCAT) *38*
- X15 (CAN) *36*
- X15 (EtherCAT) *38*
- X16 *39*

country-specific regulations *9*

D

DEV ID (see “ID”)
device condition, display of *48*
digital outputs *31*
DIP switch SW1 *45*

E

encoder (differential) *26*
encoder (single-ended) *27*
encoders
- absolute *29*
- serial *29*

EnDat encoder, wiring *57*
EPOS4 Disk Communication Plugs *19*
EPOS4 Disk Connector Set *19*
ESD *9*
EU directive, applicable *17*

H

Hall sensor *24*
how to
- calculate the required supply voltage *22*
- interpret icons (and signs) used in this document *6*

I

ID (of the device) *45*
incorporation into surrounding system *17*
informatory signs *6*
inputs
- analog *34*
- digital *31*

interfaces
- CAN *36*
- location and designation *51*
- USB *35*

J

JP301, JP302 *45*

L

LEDs, interpretation of *48*

M

mandatory action signs *6*
motor types, supported *8*

N

naming of components *8*
node address (see “ID”)
Node-ID (see “ID”)
notations used *6*

O

operating license *17*
outputs
  analog *34*
  digital *31*, *32*

P

part numbers
  668772 *8*
  688770 *8*
  696283 *40*
  696284 *40*
  696285 *41*
  696286 *41*
  696287 *41*
  696288 *42*
  696289 *42*
  710926 *19*
  710928 *44*
  710931 *42*
  710932 *43*
  710933 *43*
  710934 *44*
  748166 *19*
  751388 *19*
performance data *11*
precautions *9*
prerequisites prior installation *17*
prohibitive signs *6*
protective measures (ESD) *9*
purpose
  of the device *8*
  of the document *5*

R

regulations, applicable *9*

S

safety alerts *6*
safety first! *9*
signs used *6*
solder pads JP301, JP302 *45*
SSI encoder
  specification *29*
  wiring *57*
standards, fulfilled *16*
status LEDs *48*
supply voltage, required *22*
SW1 *45*
switch SW1 *45*
symbols used *6*

T

technical data *11*
termination (CAN bus) *37*, *47*

U

USB port *35*

W

wiring examples
  digital incremental encoder *57*
  EC (BLDC) motor *56*
  Hall sensors *56*
  power & logic supply *56*
  SSI encoder *57*

EtherCAT® is a registered trademark and patented technology, licensed by Beckhoff Automation GmbH, Germany

This document is protected by copyright. Any further use (including reproduction, translation, microfilming, and other means of electronic data processing) without prior written approval is not permitted. The mentioned trademarks belong to their respective owners and are protected under intellectual property rights.
© 2022 maxon. All rights reserved. Subject to change without prior notice.

CCMC | EPOS4 Disk 60/8 Hardware Reference | Edition 2022-04 | DocID rel10495

maxon motor ag
Brünigstrasse 220 +41 41 666 15 00
CH-6072 Sachseln www.maxongroup.com