EC frameless 90 flat ∅90 mm, brushless, 260 watt

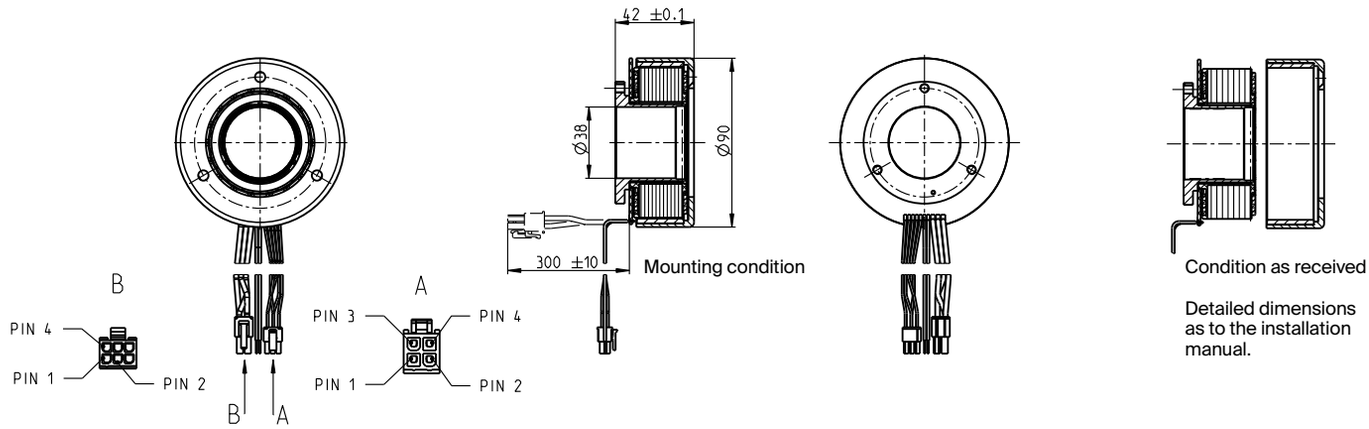

M 1:4

Stock program
Standard program
Special program (on request)

	Part Numbers			
with Hall sensors	588849	542099	581294	581295
Motor Data				
Values at nominal voltage				
1 Nominal voltage V	18	30	48	60
2 No load speed rpm	2100	2080	1960	1980
3 No load current mA	830	490	278	227
4 Nominal speed rpm	1770	1770	1660	1690
5 Nominal torque (max. continuous torque) mNm	1010	988	964	963
6 Nominal current (max. continuous current) A	12.1	7.06	4.06	3.28
7 Stall torque mNm	13400	14100	13000	13200
8 Stall current A	166	103	56.2	46.3
9 Max. efficiency %	86	87	86	86
Characteristics				
10 Terminal resistance phase to phase Ω	0.109	0.29	0.854	1.29
11 Terminal inductance phase to phase mH	0.133	0.369	1.07	1.63
12 Torque constant mNm/A	80.7	136	231	286
13 Speed constant rpm/V	118	70.2	41.3	33.4
14 Speed/torque gradient rpm/mNm	0.159	0.15	0.153	0.152
15 Mechanical time constant ms	8.85	8.32	8.47	8.41
16 Rotor inertia gcm^2	5300	5300	5300	5300

Specifications

Thermal data

17 Thermal resistance housing-ambient	1.74 K/W
18 Thermal resistance winding-housing	1.82 K/W
19 Thermal time constant winding	60.5 s
20 Thermal time constant motor	258 s
21 Ambient temperature	-40...+100°C
22 Max. winding temperature	+125°C

Mechanical data

23 Max. speed	5000 rpm

Other specifications

29 Number of pole pairs	11
30 Number of phases	3
31 Weight of motor	814 g
Weight of rotor	292 g
Weight of stator	522 g

Values listed in the table are nominal.

Connection motor (Cable AWG 16)

red	Motor winding 1	Pin 1
black	Motor winding 2	Pin 2
white	Motor winding 3	Pin 3
	N.C.	Pin 4

Connector	Part number
Molex	39-01-2040

Connection sensors (Cable AWG 24)

yellow	Hall sensor 1	Pin 1
brown	Hall sensor 2	Pin 2
grey	Hall sensor 3	Pin 3
blue	GND	Pin 4
green	V_{Hall} 4.5...24 VDC	Pin 5
	N.C.	Pin 6

Connector	Part number
Molex	43025-0600

Wiring diagram for Hall sensors see p. 59

Connection NTC (Cable AWG 24)

pink	NTC
blue	NTC

Resistance 25°C: 5 kΩ ±1%, beta (25–85°C): 3490 K

Operating Range

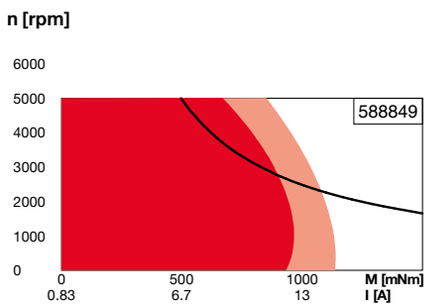

Continuous operation
Continuous operation with reduced thermal resistance R_{th2} 50%
Intermittent operation

Assigned power rating

Comments

maxon Modular System Details on catalog page 46

Recommended Electronics:

Notes	Page **46**
ESCON Mod. 50/4 EC-S	501
ESCON Mod. 50/5	501
ESCON Mod. 50/8 (HE)	502
ESCON 50/5	503
ESCON 70/10	503
DEC Module 50/5	505
EPOS4 Mod./Comp. 50/5	510
EPOS4 Mod./Comp. 50/8	513
EPOS4 Mod./Comp. 50/15	514
EPOS4 50/5	515
EPOS4 70/15	515
EPOS4 Disk 60/12	517
EPOS2 P 24/5	520