maxon thruster 70

Specification: 534851

aquaticsolutions.maxongroup.com

Contact us: aquaticsolutions@maxonmotor.com

maxon thruster 70 670 Watt

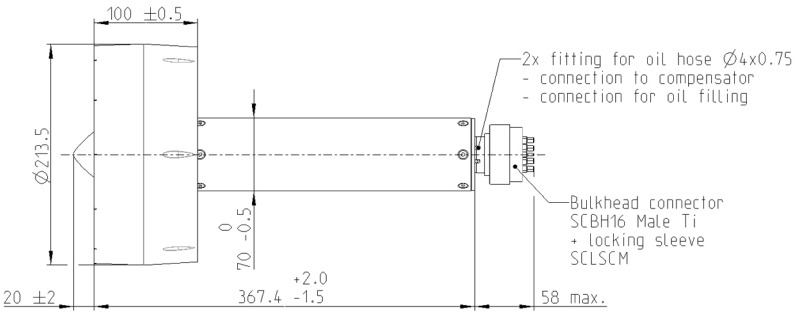

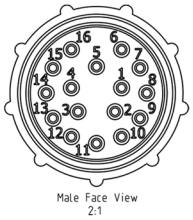

Connections	
Winding 1	6,10,14
Winding 2	7,11,15
Winding 3	8,12,16
Hall 1	5
Hall 2	9
Hall 3	13
GND	1
V Hall 3... 24 VDC	4
Temperature Sensor PTC	2
Temperature Sensor PTC	3

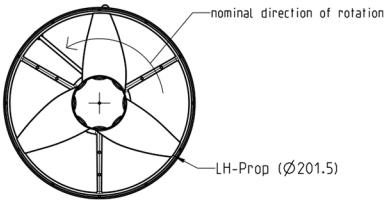

		Article number	
		Single	with MC70
Left hand propeller direction	MT70 LH	534851	606339
Right hand propeller direction	MT70 RH	619665	619677

Thruster specification			
1 Weight in air	gr	4.361	
2 Weight in water (salt water)	gr	2.830	
3 Prop diameter	mm	200	
4 Number of blades	pcs	3	
5 Depth rating	m	6.000	
7 Pressure compensation (over pressure)	bar	0.1- 0.7	
8 Continuous forward bollard thrust	kg	16.80	
9 Continuous reverse bollard thrust	kg	11.20	
10 Max. efficiency	%	80	
11 Connector (basic version)		SCBH16 Male ti	
12 Nominal Voltage	V	48	
13 Max. current	A	17.6	
14 No load current @ 5000 rpm motor	A	1	
15 Max. stall current	A	139	
16 Continuous current	A	17	
17 Max. motor temperature	°C	110	
18 Continuous motor temperature	°C	70	

Bollard thrust

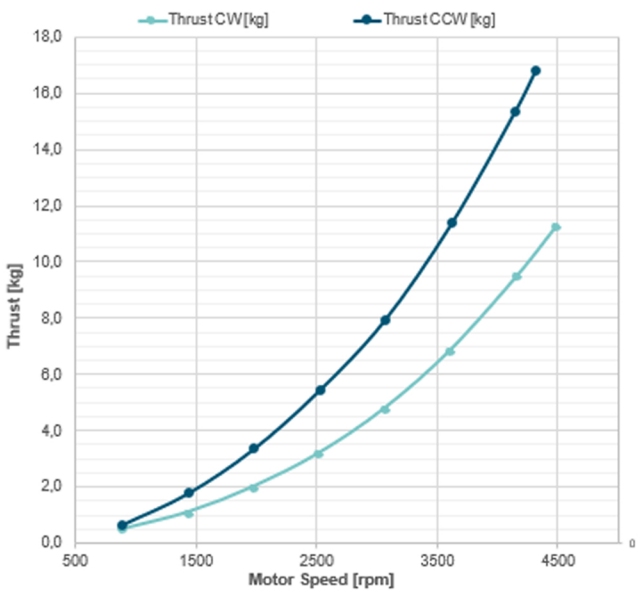

Motor Current

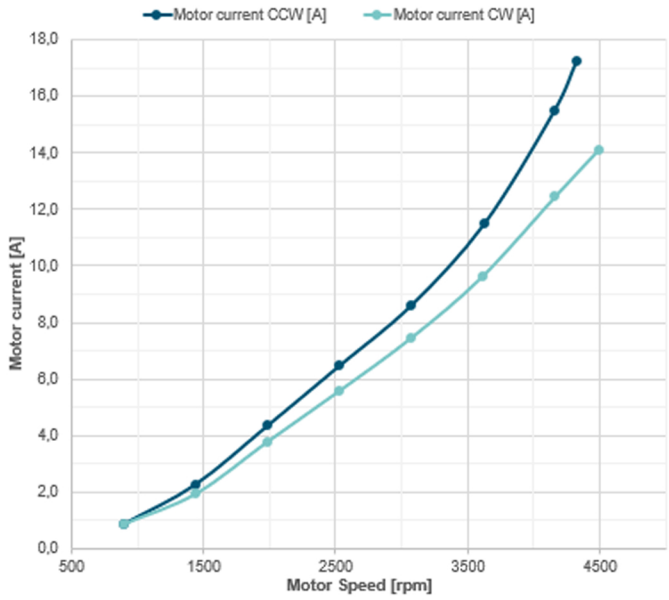

CCW = Counterclockwise (forward)
CW = Clockwise (reverse)

maxon