Precision Drive Systems

maxon

Drive solutions for AGVs and AMRs

Build your AMR with confidence. maxon Wheel Drive solutions mean fewer interfaces, simpler integration and clear responsibility.

Disclaimer
maxon assumes no liability for the accuracy of this documentation. Furthermore, changes are reserved. maxon is not liable for direct or indirect damages resulting from the use of this documentation. Mandatory legal provisions remain reserved.

© 2026 maxon. All rights reserved. Any use, in particular reproduction, editing, translation and copying without prior written approval is not permitted (contact: maxon international ltd., Brünigstrasse 220, CH-6072 Sachseln, +41 41 666 15 00, www.maxongroup.com). Infringements will be prosecuted under civil and criminal law. The mentioned trademarks belong to their respective owner and are protected under trademark laws. Subject to change without prior notice.

© 2026 maxon. All rights reserved.

Contents

We are maxon 4
The engineering challenge for AMRs 5
Drive solutions for modern intralogistics 6
Integrated Wheel Drive solutions 8
Modular wheel drive platforms for AMRs 9
Why integrated drive systems matter 10
Fewer suppliers. Simpler integration. 11
From conception to series production 12
Quality and testing facilities 14
Certified to international standards 15
From component to customized system solutions 16
AMR product selection 17
The 6 steps to selecting drive solution for AMRs 72
Functional safety in AMRs 74
Functional safety technology 76

© 2026 maxon. All rights reserved.

We are maxon

The story of maxon began in Switzerland in 1961 with eight employees. Before long, the company invested in its first own facilities and a small production hall. Today, 3,200 people work for maxon – and we call the whole world our home.

A view of maxon's headquarters in Switzerland: idyllically located on the edge of the village of Sachseln. Picture: Jeremias Wieland

Every journey has a beginning – and maxon's began with a government mandate. The German company Braun operated a distribution subsidiary in Switzerland. In the 1950s, Swiss authorities approached Braun with an ultimatum: if the company wanted to continue distributing its products in Switzerland, it would also need to establish manufacturing operations in the country. Preferably in an economically weaker region.

The Braun family complied, choosing the canton of Obwalden in the heart of Switzerland. In 1961, Interelectric AG was founded with eight employees (later renamed maxon) and soon began production. At the time, the company manufactured foil cutters for Braun shavers. But the young company's future was suddenly at risk: in 1967, Braun was sold to the Gillette Company. Gillette wanted to produce the foil cutters in-house but granted maxon a transition period.

The ironless winding

A new idea was needed and the pioneering era of maxon began. The leadership team saw potential in the production of small, precise electric motors. After a brief research phase, they developed a complete range of DC motors featuring a special patented innovation: the ironless winding. This gave the motors high efficiency, and their long service life set new standards for reliable drive technology.
That first motor series was only the beginning. Innovation has always been a top priority at maxon. Over the years, the small pioneering operation evolved into a global company. Today, maxon has 3,200 employees worldwide, operates ten production and assembly facilities, and maintains over 40 sales locations.

The company remains owned by the Braun family. Five million drive units leave its production sites each year. The range of applications for our motors is vast: from insulin pumps to logistics robots to NASA's Mars rover, they perform reliably in demanding environments.

What began with regulatory pressure has become an innovative company that has grown and thrived – while never abandoning the pioneering spirit of 1961. That legacy remains deeply rooted in the company to this day and continues to shape its identity.

© 2026 maxon. All rights reserved.

The engineering challenge for AMRs

For AMR manufacturers, the first question is whether the real operating conditions are fully understood before a drive concept is fixed.

AMR applications rarely fail on nominal values. They fail at the edges of the duty cycle: repeated acceleration of heavy payloads, long shifts on limited battery capacity, safe braking performance, and tight-space manoeuvring without efficiency losses. If these conditions are not captured early, the outcome is either an overdesigned system carrying unnecessary cost, or an undersized one that brings instability, excessive heat, reduced runtime, and rework during integration. maxon brings together the motor, gearhead, sensor, brake, and electronics as one coordinated drive solution, giving OEMs a simpler and more reliable path from prototype to volume/serial production. maxon addresses this from the first inquiry by working closely with customers to build a complete understanding of the application, including payload profile, route characteristics, duty cycle, ambient conditions, safety concept, installation space, and cost targets.

This early alignment creates a stronger technical foundation for the entire development process. It helps customers make better design decisions sooner, reduce unnecessary iterations, and establish clearer requirements for validation and industrialization. The drive solution is configured around what the vehicle must achieve in real operating conditions, rather than adapting the AMR around standard hardware.

With fewer interfaces to manage, clear technical responsibility, and proven component quality, OEMs can streamline sourcing, accelerate integration and validation, and achieve more consistent system performance. The same coordinated approach supports reliable scaling into series production, long-term availability, efficient maintenance, and dependable service throughout the robot's operating life.

© 2026 maxon. All rights reserved.

Drive solutions for modern intralogistics

From floor-based AGVs, to PA-AMRs, shuttles, and automated storage systems, every logistics application places different demands on the drives. Customers trust maxon to turn these requirements into reliable, application-specific drive solutions.

Drive solutions for goods transport

AGV/AMR

Automated Guided Vehicles for fixed-route material transport and Autonomous Mobile Robots for flexible navigation.

LGV

Laser-Guided Vehicles for precise material transport.

PA-AMR (P2G)

Person-to-Goods robots for efficient and safe order picking.

AMR Shuttle

Mobile shuttles for transport between workstations and storage zones.

© 2026 maxon. All rights reserved.

Power density and safety

- Certified enhanced functional safety
- Minimized space and weight requirements
- Enhanced uptime and operational reliability

Business relationship

- Strong R&D Hubs in CH, EU, KR, CN
- Scalable production across key regions
- Trusted long-term collaboration

Efficiency

- High-efficiency components
- Reduced charging cycles
- Extended battery life

Drive solutions for goods storage and retrieval

cASRS

Compact automated systems for high-density storage and retrieval.

ASRS

Automated storage and retrieval systems for high throughput and scalability.

XYZ Shuttle

Three-axis storage robot that moves horizontally, vertically, and into or out of the rack to store and retrieve goods.

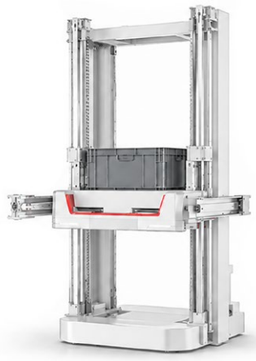

Shuttle

Rail-guided robot that transports goods horizontally between storage locations within an automated warehouse system.

© 2026 maxon. All rights reserved.

Integrated Wheel Drive solutions

In AMR development, the drive system is more than a set of components. It determines how the robot moves, stops, handles payloads, manages energy and heat, and performs safely across different operating conditions. This is why maxon develops integrated Wheel Drive systems that can be configured around the specific requirements of the AMR application.

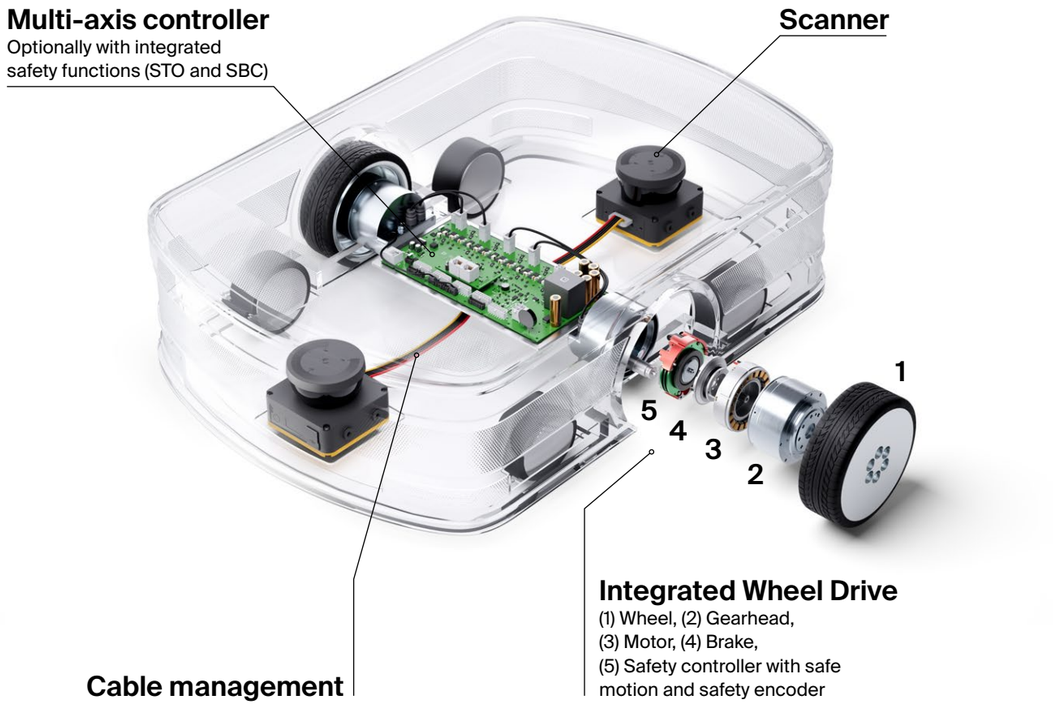

What is a maxon integrated Wheel Drive solution?

A maxon integrated wheel drive brings together everything that moves an AMR: motor, gearhead, feedback, brake, electronics, wheel, interface and, where required, certified safety functions. All elements are matched as one coordinated subsystem to your payload, speed, duty cycle, installation space and operating environment.

The benefit for you: fewer interfaces, lower integration risk and predictable motion, braking and thermal behaviour. Gearing, connectors, cables, housings and interfaces are adapted to your platform, so you move from prototype to series production faster and scale across vehicle variants without redesigning the drive architecture.

© 2026 maxon. All rights reserved.

Modular wheel drive platforms for AMRs

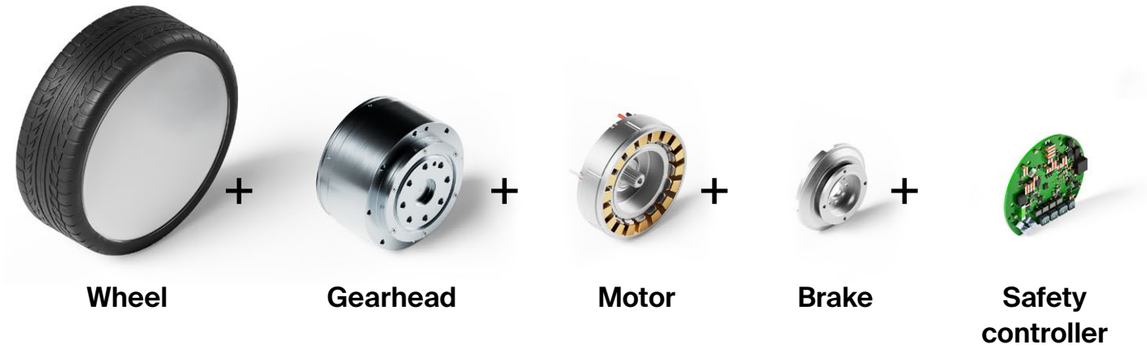

- Proven component compatibility
- Faster testing, validation and approval
- Shorter development cycles with less custom engineering
- Fewer components and supplier interfaces
- Application-specific configuration
- Easier scaling from prototype to fleet production

Additional system assets

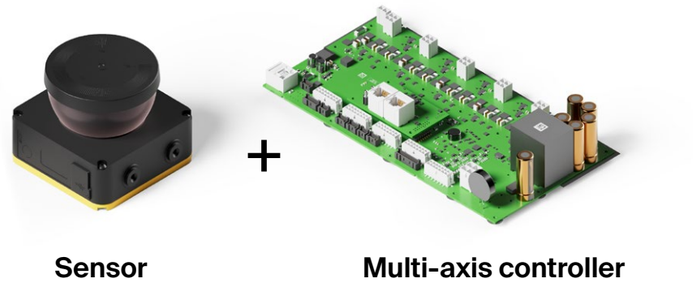

maxon supplies the multi axis controller that turns navigation and safety commands into coordinated wheel movements, synchronising speed, acceleration, steering and braking for smooth manoeuvring and precise stopping. We also support you in integrating safety rated laser scanners, LiDAR and 3D sensors into this architecture, so a detected person or obstacle reliably leads to reduced speed, a safe stop or safe holding in position. The result is one coherent motion and safety concept from a single partner.

© 2026 maxon. All rights reserved.

Why integrated drive systems matter

1. Reliability in continuous operation

Warehouse robots do not work under one fixed load condition. They accelerate, brake, reverse, and carry changing payloads throughout every shift. This puts constant mechanical, electrical, and thermal stress on the drive system. That is why the complete Wheel Drive must be matched to the real duty cycle of the vehicle. When the motor, gearhead, wheel, brake, encoder, and electronics are engineered as one subsystem, the robot can run with more stable thermal behavior, less wear, and more consistent motion. Across a fleet, this supports higher uptime and fewer unplanned maintenance stops.

2. Energy efficiency across the complete Wheel-Drive solution

AMR efficiency depends on the complete drive system, not the motor alone. Vehicle weight, payload, wheel size, gearing, and acceleration all influence how much energy is needed for each movement. If the drive is not properly matched to the application, the result can be more heat, higher current consumption, and shorter battery runtime. An integrated drive system allows the motor, gear ratio, wheel speed, battery voltage, and control parameters to work together. This helps reduce energy losses, extend runtime, and improve vehicle availability across daily warehouse operations.

3. Predictable motion, braking and functional safety behavior

The drive system defines how an AMR moves, turns and stops. Predictable motion is essential for accurate navigation, safe material handling, and reliable operation around people and equipment. This depends on the components working together in the right sequence. During a safety stop, functions such as Safe Torque Off (STO), and Safe Brake Control (SBC) must match the vehicle's speed, payload, and stopping distance. A coordinated drive system supports smoother motion, controlled braking, and safer behavior in real operating conditions.

4. Reduced integration complexity and earlier engineering validation

A poorly matched drive architecture can create major problems late in development. Once the chassis, battery layout, and installation space are fixed, changes become expensive and time-consuming. Separately sourced components also create more interfaces to tune, test, and validate. An integrated approach helps engineering teams check torque demand, thermal behavior, energy use, stopping performance, and control response earlier in the process. This reduces uncertainty, avoids late redesign loops and gives teams more confidence before prototypes are finalised.

5. Scalable platforms and predictable lifecycle performance

A drive solution that works in one prototype must also support future vehicle variants. As AMRs expand into different payloads, speeds, wheel sizes, and environments, complexity can grow quickly. A modular integrated drive architecture gives OEMs a common technical foundation. Motor power, gear ratio, brake configuration, encoder, interface, wheel size, and protection level can then be adapted to each application. This gives CTOs a more predictable platform, engineers fewer validation variants, purchasing teams clearer supplier responsibility, and service teams more repeatable lifecycle support.

© 2026 maxon. All rights reserved.

Fewer suppliers. Simpler integration.

A coordinated Wheel Drive system reduces the number of technical and supplier interfaces teams need to manage, simplifies validation, and creates a clearer path to series production.

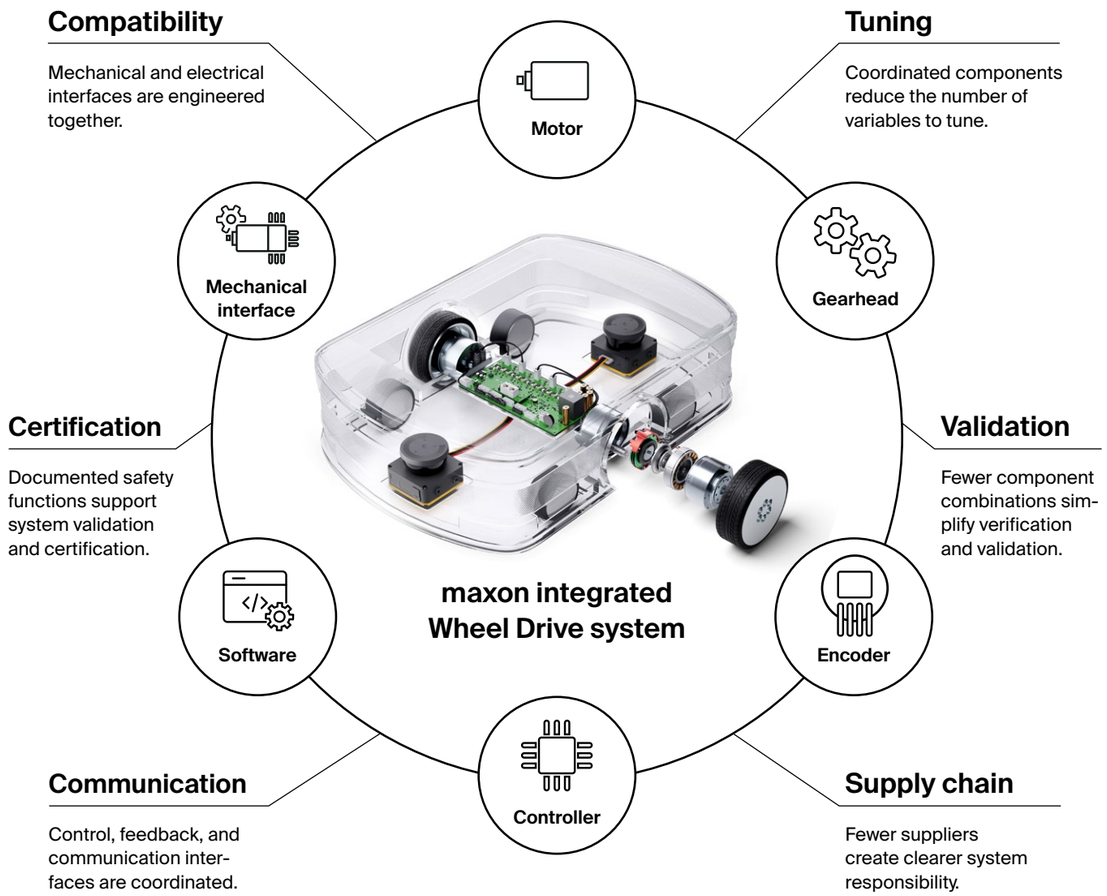

© 2026 maxon. All rights reserved.

From conception to series production

A structured development process matters because AMR projects are exposed to technical and commercial risks at every stage. Seemingly small errors in requirements, concept selection, validation planning, or production readiness can cascade into missed deadlines, additional prototype loops, and higher total project cost. maxon's Product Development Process 2.0 (PDP 2.0) is designed to reduce these risks systematically.

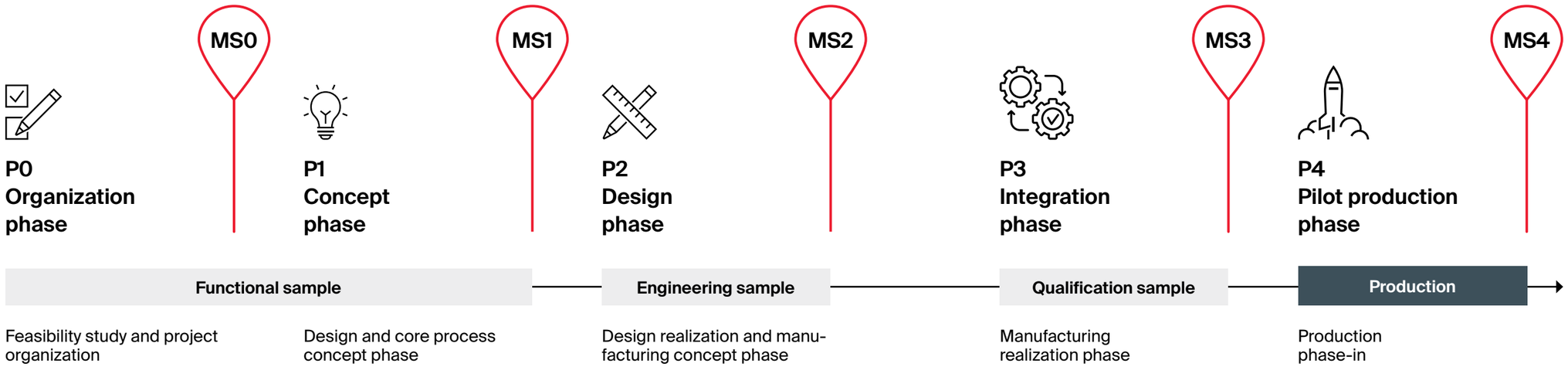

The five phases

Organization phase – MS0

The project begins by defining the application, technical requirements, commercial targets, responsibilities, and timeline. A feasibility study confirms whether the concept can be delivered within the required performance, cost, and production constraints. The result is a clearly structured project with agreed objectives and development scope.

Concept phase – MS1

The system architecture and core operating principles are established. Key technologies, interfaces, and components are evaluated, and an initial functional sample is created to prove that the proposed solution works. At this stage, the focus is on validating feasibility rather than finalizing the production design.

Design phase – MS2

The selected concept is developed into an engineering-ready solution. Components are sized, mechanical and electrical interfaces are defined, and the design is adapted for manufacturing, assembly and serviceability. Engineering samples are then used to verify performance under representative operating conditions.

Integration phase – MS3

The complete system is integrated and tested as a coordinated solution. Performance, thermal behavior, communication, braking, functional safety, and reliability are validated against the application requirements. Manufacturing processes, quality controls, and assembly procedures are also established, leading to a qualification sample.

Pilot production phase – MS4

The solution moves into controlled small-volume manufacturing to confirm process consistency and the required quality level. Tools, processes, suppliers, and testing procedures are verified before final phase-in. Once these checks are complete, the system is ready for series production and wider deployment.

© 2026 maxon. All rights reserved.
© 2026 maxon. All rights reserved.

Quality and testing facilities

Quality at maxon is built into every stage of an AMR drive system – from design and component selection to production, validation and series delivery. Clear engineering standards, defined technical specifications and controlled manufacturing processes help ensure repeatable performance across prototypes, vehicle variants and full fleet deployment. This approach is supported by the maxon Quality Mindset and globally aligned management systems based on standards including ISO 9001 and ISO 14001.

AMR drive systems must perform reliably under conditions that go far beyond nominal laboratory operation. Depending on the application, maxon can validate drive components and subsystems through shock and crash testing, random vibration testing, and exposure to temperature variation and humidity.

Quality extends across the wider supply chain. maxon's supplier requirements define expectations for technical quality, responsible business practices and environmental performance. Audits and structured qualification processes help maintain consistent standards.

Temperature testing
Our test laboratory can measure motor start-up current and voltage at temperatures down to –55 °C. This helps verify whether the intended power supply can support reliable cold-start performance in the final application.

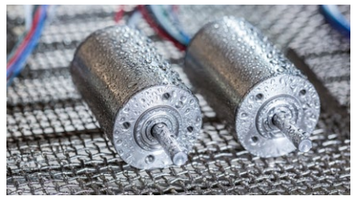

Humidity testing
Our test laboratory can perform cyclic humidity testing over 10 temperature cycles between 38 °C and 65 °C at 85% relative humidity. This helps assess resistance to moisture, condensation, and repeated environmental stress.

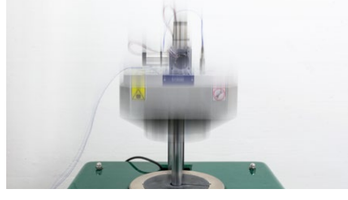

Shock and crash-safety testing
Testing at 20 g for 11 ms verifies that drive components and assemblies can withstand severe impact loads without compromising mechanical integrity or function.

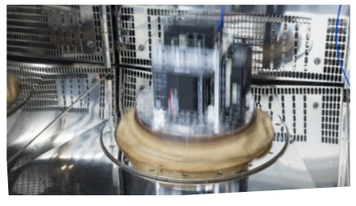

Random vibration testing
Random vibration testing simulates the unpredictable mechanical loads experienced during operation and transport. This helps verify the durability of components and connections.

© 2026 maxon. All rights reserved.

Certified to international standards

Consistent standards for quality, safety, and procedures ensure that only premium products leave our factories. The business and production processes fulfill international standards such as ISO 9001 and ISO 14001. Products for the mobility industry can also be produced with UL approval.

Quality: SN EN ISO 9001

The quality management standard ISO 9001 defines quality as the degree to which given requirements are fulfilled. It establishes the requirements for a quality management system that an organization needs to comply with in order to provide products and services that meet customer expectations as well as regulatory requirements. Among these requirements is the need for the management system to undergo a continuous improvement process.

Functional Safety of machinery: DIN EN ISO 13849

DIN EN ISO 13849 is a functional-safety standard for the safety-related parts of machinery control systems. It defines how control systems must be designed and validated so that safety functions – such as emergency stopping, safe braking, speed limitation or preventing unexpected movement – reduce risk to an acceptable level.

Information security: ISO/IEC 27001

ISO/IEC 27001 is the globally recognized standard that defines the requirements for establishing, operating, and improving an information security management system (ISMS). The goal of an ISMS is to manage risks to the confidentiality, integrity, and availability of information assets in alignment with an organization's objectives. ISO 27001 includes a set of best-practice controls designed to mitigate risks associated with sensitive information.

Environment: SN EN ISO 14001

The internationally recognized standard SN EN ISO 14001 defines the requirements for an effective environmental management system. It covers all environmentally relevant processes within a company. The standard obliges management and employees to act in an environmentally responsible manner, comply with legal requirements, and continuously optimize processes. Its goal is to reduce environmental impact, use resources efficiently, and sustainably minimize emissions.

© 2026 maxon. All rights reserved.

From the component to the customized system solution

From individual components and integrated subsystems to fully customized drive systems, maxon supports AMR projects at every level. Our specialists translate complex requirements into application-specific solutions designed for reliable performance, efficient integration and long-term operation.

Level 4:

Customer application Tailored solutions reducing your time-to-market.

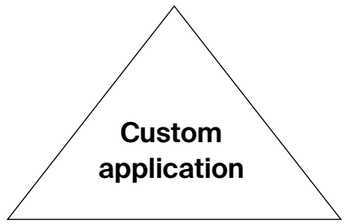

Level 3:

Systems & Sub-systems with higher complexity. Complete systems and sub-systems for your production or service.

Level 2:

Sub-systems with lower complexity. Combinations of standard components. Application-specific firmware.

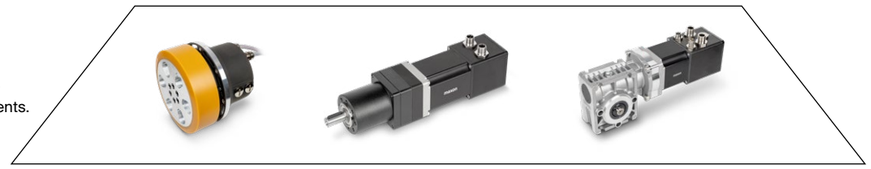

Level 1:

Components. Motors, gear-heads, brakes, sensors, motion controllers, multi-axis controllers, firmware, software.

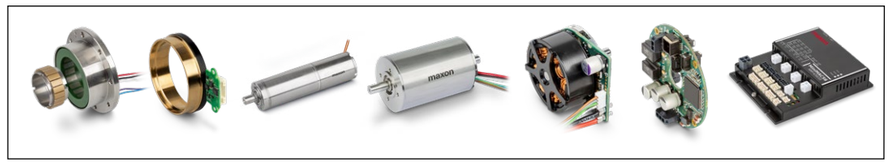

© 2026 maxon. All rights reserved.

AMR product selection

Level 1

Motors 22–31
Gearheads 32–43
Sensors 44–46
Control Electronics 48–52

Level 2

IDX Servo Motors 54
Lift mechanism 55
Wheel Drive Systems 56–58

Level 3

IDX Servo Motors 62
Wheel Drive Systems 63–65
High Efficiency Joints 66–71

© 2026 maxon. All rights reserved.

Level 1 Components

Motors, gearheads, brakes, sensors, motion controllers, multi-axis controllers, firmware, software.

ECX FLAT

EC-i

ECX PRIME

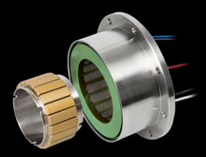

EC frameless DT

EC frameless HT

GPX

GSW

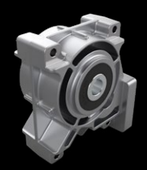

GB

Sensors

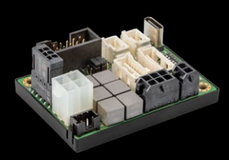

Control Electronics

Motors

ECX FLAT	20–22
EC-i	23–24
ECX PRIME	25
EC frameless	26–31

Gearheads

GPX	32–39
GSW	40–41
GB	42–43

Sensors

ENX	44–45
TSX	46

Control Electronics	48–52

The page numbers referenced in the following data sheets correspond to the **maxon Product Program 2026/27.**

© 2026 maxon. All rights reserved.
© 2026 maxon. All rights reserved.

ECX FLAT 22 S ∅22 mm, brushless, BLDC motor

High Torque

Key data: 17/21.1 W, 15.5 mNm, 15 000 rpm

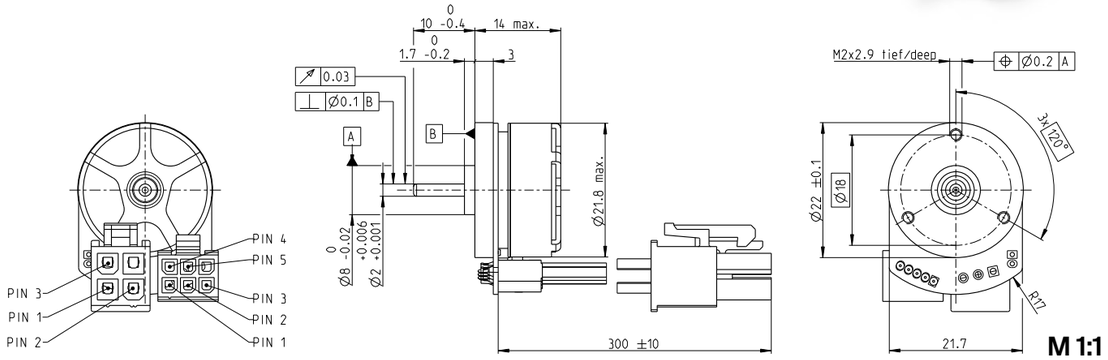

M 1:1

	Motor data				
1_	Nominal voltage	V	12	18	24
2_	No load speed	rpm	13300	12100	12600
3_	No load current	mA	122	69.4	55.7
4_	Nominal speed	rpm	10300	9200	9640
5_	Nominal torque	mNm	14.9	15.5	14.9
6_	Nominal current (max. continuous current)	A	1.74	1.08	0.817
7_	Stall torque[1]	mNm	64.1	63.2	62.7
8_	Stall current	A	11.1	6.51	5
9_	Max. efficiency	%	80.5	80.8	80.4
10_	Terminal resistance	Ω	1.08	2.77	4.8
11_	Terminal inductance	mH	0.158	0.431	0.706
12_	Torque constant	mNm/A	8.47	14	17.9
13_	Speed constant	rpm/V	1130	682	533
14_	Speed/torque gradient	rpm/mNm	143	135	143
15_	Mechanical time constant	ms	7.26	6.82	7.24
16_	Rotor inertia	gcm²	4.84	4.84	4.84
	Thermal data				
17_	Thermal resistance housing-ambient	K/W	9.64		
18_	Thermal resistance winding-housing	K/W	12.6		
19_	Thermal time constant winding	s	9.95		
20_	Thermal time constant motor	s	23		
21_	Ambient temperature	°C	-40...+100		
22_	Max. winding temperature	°C	155		
	Mechanical data ball bearings				
23_	Max. speed	rpm	15 000		
24_	Axial play at axial load	< 1.5 N	0 mm		
		> 1.5 N	0.14 mm		
	Direction of force		pull		
25_	Radial play		preloaded		
26_	Max. axial load (dynamic)	N	1.8		
27_	Max. force for press fits (static)	N	26		
	(static, shaft supported)	N	200		
28_	Max. radial load [mm from flange]	N	3.5 [5]		
	Other specifications				
29_	Number of pole pairs		6		
30_	Number of phases		3		
31_	Weight of motor	g	26.4		

Operating range

n [rpm] winding 24 V

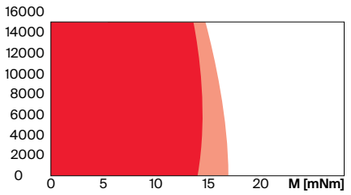

- Continuous operation
- Continuous operation with reduced thermal resistance R_{th2} 50%
- Short term operation

Modular system Details on catalog page 56

Gearheads	Stages [opt.]	Sensors	Control Electronics
351_GPX 22 A/C	1–2 [3–4]	406_ENX 22 MILE	443_DEC Module 24/2
352_GPX 22 LN/LZ	1–2 [3–4]		443_DEC Module 50/5
353_GPX 22 HP	2–3 [4]		447_ESCON2 Nano 24/2
355_GPX 22 UP	1–4		447_ESCON2 Micro 60/5
357_GPX 26 A/C	3		449_ESCON2 Compact 60/2
358_GPX 26 LN/LZ	3		454_EPOS4 Micro 24/5 CAN
359_GPX 26 HP	4		454_EPOS4 Micro 24/5 EtherCAT
390_GSW 20 HP			455_EPOS4 Module 24/1.5
			455_EPOS4 Module 50/5
			457_Compact 24/5 EtherCAT 3-axes
			457_EPOS4 Compact 24/1.5
			458_EPOS4 Compact 50/5
			461_EPOS4 50/5

Configuration

Flange: standard flange
Shaft, front: length/shaft shoulder/faces
Shaft, rear: length/shaft shoulder

Connections, motor (cable AWG 22)
Pin 1 Motor winding 1
Pin 2 Motor winding 2
Pin 3 Motor winding 3
Pin 4 N.C.

Connector, Part number
Molex, 39-01-2040

Connections, sensors (cable AWG 28)
Pin 1 Hall sensor 1
Pin 2 Hall sensor 2
Pin 3 Hall sensor 3
Pin 4 GND
Pin 5 V_{Hall} 3.5...24 VDC
Pin 6 N.C.

Connector, Part number
Molex, 43025-0600

Circuit diagram for Hall sensors see page 73.

[1]Calculation does not include saturation effect (p. 93/129)

© 2026 maxon. All rights reserved. Subject to change.

ECX FLAT 32 S ∅32 mm, brushless, BLDC motor

High Torque

Key data: 65/137 W, 84.9 mNm, 14 000 rpm

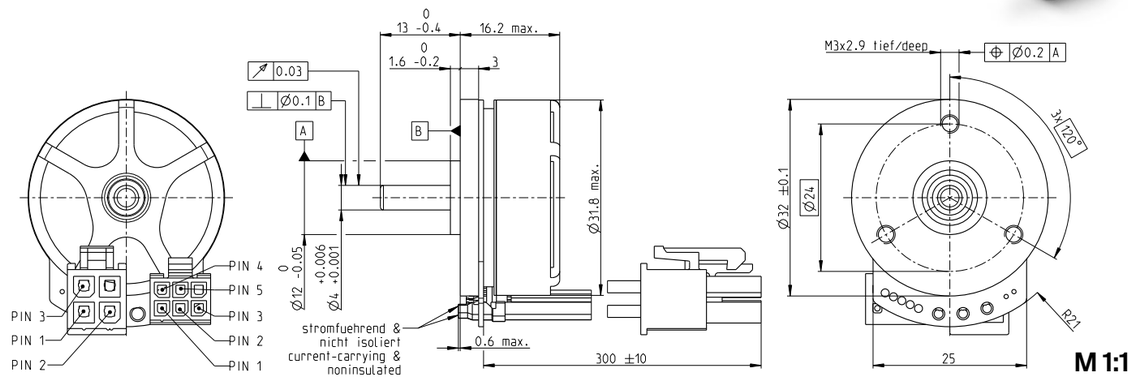

M 1:1

	Motor data				
1_	Nominal voltage	V	18	24	48
2_	No load speed	rpm	11800	12600	13500
3_	No load current	mA	204	171	96.2
4_	Nominal speed	rpm	8720	9400	10300
5_	Nominal torque	mNm	78.9	80	81
6_	Nominal current (max. continuous current)	A	4.83	3.91	2.14
7_	Stall torque[1]	mNm	264	275	250
8_	Stall current	A	44.9	39.8	24.6
9_	Max. efficiency	%	87	87.4	87.9
10_	Terminal resistance	Ω	0.401	0.603	1.95
11_	Terminal inductance	mH	0.194	0.303	1.05
12_	Torque constant	mNm/A	14.4	18	33.7
13_	Speed constant	rpm/V	662	529	284
14_	Speed/torque gradient	rpm/mNm	18.4	17.7	16.4
15_	Mechanical time constant	ms	4.7	4.52	4.2
16_	Rotor inertia	gcm²	24.4	24.4	24.4
	Thermal data				
17_	Thermal resistance housing-ambient	K/W	4.31		
18_	Thermal resistance winding-housing	K/W	2.56		
19_	Thermal time constant winding	s	8.52		
20_	Thermal time constant motor	s	128		
21_	Ambient temperature	°C	-40...+100		
22_	Max. winding temperature	°C	155		
	Mechanical data ball bearings				
23_	Max. speed	rpm	14000		
24_	Axial play at axial load	< 4 N	0 mm		
		> 4 N	0.14 mm		
	Direction of force		pull		
25_	Radial play		preloaded		
26_	Max. axial load (dynamic)	N	4		
27_	Max. force for press fits (static)	N	45		
	(static, shaft supported)	N	1000		
28_	Max. radial load [mm from flange]	N	12 [5]		
	Other specifications				
29_	Number of pole pairs		6		
30_	Number of phases		3		
31_	Weight of motor	g	59.1		

Operating range

n [rpm] winding 24 V

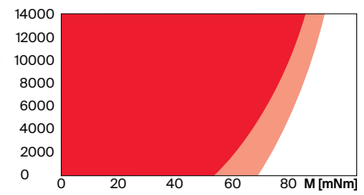

- Continuous operation
- Continuous operation with reduced thermal resistance R_{th2} 50%
- Short term operation

Modular system Details on catalog page 56

Gearheads	Stages [opt.]	Sensors	Control Electronics
360_GPX 32 A/C	1–2 [3]	407_ENX 32 MILE	443_DEC Module 24/2
361_GPX 32 LN/LZ	1–2 [3]		443_DEC Module 50/5
362_GPX 32 HP	2–3 [4]		447_ESCON2 Nano 24/2
363_GPX 32 UP	1–4		447_ESCON2 Micro 60/5
364_GPX 37 A	3		449_ESCON2 Compact 60/2
365_GPX 37 LN/LZ	3		449_ESCON2 Compact 60/5
391_GSW 30 HP			454_EPOS4 Micro 24/5 CAN
			454_EPOS4 Micro 24/5 EtherCAT
			455_EPOS4 Module 24/1.5
			455_EPOS4 Module 50/5
			457_Compact 24/5 EtherCAT 3-axes
			457_EPOS4 Compact 24/1.5
			458_EPOS4 Compact 50/5
			461_EPOS4 50/5

Configuration

Flange: standard flange
Shaft, front: length/shaft shoulder/faces
Shaft, rear: length/shaft shoulder

Connections, motor (cable AWG 20)
Pin 1 Motor winding 1
Pin 2 Motor winding 2
Pin 3 Motor winding 3
Pin 4 N.C.

Connector, Part number
Molex, 39-01-2040

Connections, sensors (cable AWG 28)
Pin 1 Hall sensor 1
Pin 2 Hall sensor 2
Pin 3 Hall sensor 3
Pin 4 GND
Pin 5 V_{Hall} 2.7...24 VDC
Pin 6 N.C.

Connector, Part number
Molex, 43025-0600

Circuit diagram for Hall sensors see page 73.

[1]calculation does not include saturation effect (p. 93/129)

© 2026 maxon. All rights reserved. Subject to change.

ECX FLAT 42 M ∅42 mm, brushless, BLDC motor

High Torque

Key data: 150/223 W, 221 mNm, 10 000 rpm

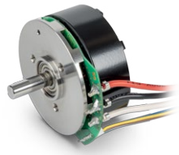

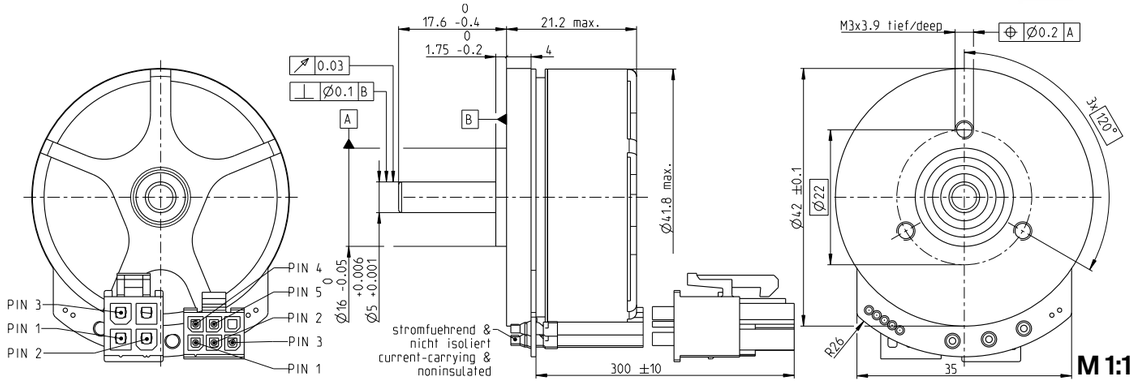

	Motor data			
1_	Nominal voltage	V	24	48
2_	No load speed	rpm	8050	7560
3_	No load current	mA	363	163
4_	Nominal speed	rpm	6470	6070
5_	Nominal torque	mNm	213	220
6_	Nominal current (max. continuous current)	A	7.31	3.52
7_	Stall torque[1]	mNm	1110	1140
8_	Stall current	A	103	51.4
9_	Max. efficiency	%	83.5	84.1
10_	Terminal resistance	Ω	0.233	0.933
11_	Terminal inductance	mH	0.153	0.698
12_	Torque constant	mNm/A	28.2	60.1
13_	Speed constant	rpm/V	339	159
14_	Speed/torque gradient	rpm/mNm	2.81	2.47
15_	Mechanical time constant	ms	2.54	2.23
16_	Rotor inertia	gcm²	86.2	86.2
	Thermal data			
17_	Thermal resistance housing-ambient	K/W	1.66	
18_	Thermal resistance winding-housing	K/W	3.04	
19_	Thermal time constant winding	s	20.2	
20_	Thermal time constant motor	s	92.3	
21_	Ambient temperature	°C	-40...+100	
22_	Max. winding temperature	°C	155	
	Mechanical data ball bearings			
23_	Max. speed	rpm	10 000	
24_	Axial play at axial load	< 6 N	0 mm	
		> 6 N	0.14 mm	
	Direction of force		pull	
25_	Radial play		preloaded	
26_	Max. axial load (dynamic)	N	6	
27_	Max. force for press fits (static)	N	86	
	(static, shaft supported)	N	1300	
28_	Max. radial load [mm from flange]	N	40 [5]	
	Other specifications			
29_	Number of pole pairs		8	
30_	Number of phases		3	
31_	Weight of motor	g	127	

Operating range

n [rpm] winding 24 V

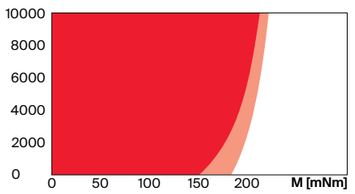

- Continuous operation
- Continuous operation with reduced thermal resistance R_{th2} 50%
- Short term operation

Modular system Details on catalog page 52

Gearheads	Stages [opt.]	Sensors
366_GPX 42 C	1–4	408_ENX 42 MILE
366_GPX 42 UP	1–4	
392_GSW 40 HP		
393_GSW 55 A		
394_GSW 62 A		

Control Electronics
443_DEC Module 50/5
447_ESCON2 Micro 60/5
449_ESCON2 Compact 60/5
449_ESCON2 Compact 60/12
450_ESCON2 Module 60/12
450_ESCON2 60/12
454_EPOS4 Micro 24/5 CAN
454_EPOS4 Micro 24/5 EtherCAT
455_EPOS4 Module 50/5
457_Compact 24/5 EtherCAT 3-axes
458_EPOS4 Compact 50/5
459_EPOS4 Compact 50/8
461_EPOS4 50/5
462_EPOS4 Disk 60/8
463_EPOS4 Disk 60/12

Configuration
Flange: standard flange
Shaft, front: length/shaft shoulder/faces
Shaft, rear: length/shaft shoulder

Connections, motor (cable AWG 18)
Pin 1 Motor winding 1
Pin 2 Motor winding 2
Pin 3 Motor winding 3
Pin 4 N.C.

Connector, Part number
Molex, 39-01-2040

Connections, sensors (cable AWG 28)
Pin 1 Hall sensor 1
Pin 2 Hall sensor 2
Pin 3 Hall sensor 3
Pin 4 GND
Pin 5 V_{Hall} 2.7...24 VDC
Pin 6 N.C.

Connector, Part number
Molex, 43025-0600

Circuit diagram for Hall sensors see page 73.

[1]calculation does not include saturation effect (p. 93/129)

© 2026 maxon. All rights reserved. Subject to change.

EC-i 52 ∅52 mm, brushless, 200 watt

High Torque

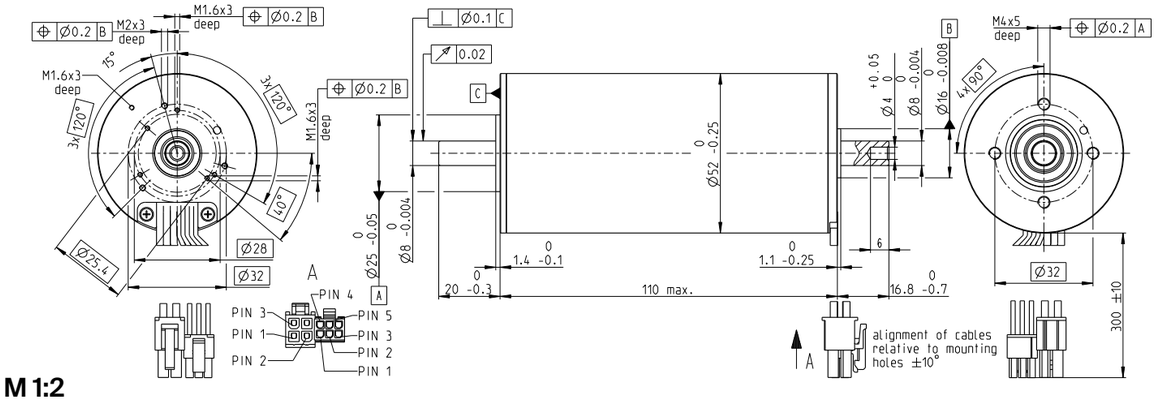

M 1:2

- Stock program
- Standard program
- Special program (on request)

		Part numbers		
	with Hall sensors	606793	596099	634043
Motor data (provisional)				
	Values at nominal voltage			
1	Nominal voltage V	24	36	48
2	No load speed rpm	3340	3660	3970
3	No load current mA	657	499	419
4	Nominal speed rpm	2970	3300	3610
5	Nominal torque mNm	646	655	627
6	Nominal current (max. continuous current) A	9.42	6.98	5.48
7	Stall torque mNm	6820	7380	7830
8	Stall current A	205	205	203
9	Max. efficiency %	88.9	90.2	90.9
	Characteristics			
10	Terminal resistance phase to phase Ω	0.117	0.176	0.236
11	Terminal inductance phase to phase mH	0.149	0.28	0.424
12	Torque constant mNm/A	68	93.1	115
13	Speed constant rpm/V	140	103	83.3
14	Speed/torque gradient rpm/mNm	0.241	0.194	0.172
15	Mechanical time constant ms	0.668	0.535	0.475
16	Rotor inertia gcm²	264	264	264

Specifications

Thermal data

17	Thermal resistance housing-ambient	4.02 K/W
18	Thermal resistance winding-housing	0.53 K/W
19	Thermal time constant winding	17.4 s
20	Thermal time constant motor	2310 s
21	Ambient temperature	-40...+100 °C
22	Max. winding temperature	+155 °C

Mechanical data (preloaded ball bearings)

23	Max. permissible speed	5 000 rpm
24	Axial play at axial load < 15 N	0 mm
	> 15 N	0.14 mm
25	Radial play	preloaded
26	Max. axial load (dynamic)	12 N
27	Max. force for press fits (static)	150N
	(static, shaft supported)	6000 N
28	Max. radial load, 5 mm from flange	110 N

Other specifications

29	Number of pole pairs	8
30	Number of phases	3
31	Weight of motor	1150 g

Values listed in the table are nominal.

Connection motor (Cable AWG 16)

red	Motor winding 1	Pin 1
black	Motor winding 2	Pin 2
white	Motor winding 3	Pin 3
	N.C.	Pin 4

Connector	Article number
Molex	39-01-2040

Connection sensor (Cable AWG 26)

yellow	Hall sensor 1	Pin 1
brown	Hall sensor 2	Pin 2
grey	Hall sensor 3	Pin 3
blue	GND	Pin 4
green	V_{Hall} 4.5...24 VDC	Pin 5
	N.C.	Pin 6

Connector	Article number
Molex	430-25-0600

Wiring diagram for Hall sensors see p. 73

Operating range Comments

n [rpm]

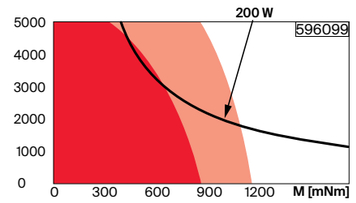

- Continuous operation
- Continuous operation with reduced thermal resistance R_{th2} 50%
- Intermittent operation
- Assigned power rating

Modular system Details on catalog page 56

Gearheads	Sensors	Control Electronics
369–370_GPX 52	420_ENX 16 EASY	447_ESCON2 Micro 60/5
386_GP 52 C	421_ENX 16 EASY XT	448_ESCON2 Module 60/12
393_GSW 55 A	431_TSX 40 MAG	449_ESCON2 Compact 60/12
394_GSW 62 A	432_ENX 16 RIO	450_ESCON2 60/12
395_GSW 70 A	436_ENX 16 EASY Absolute	455_EPOS4 Module 50/8
398_GB 80[1]	437_ENX 16 EASY Absolute XT	455_EPOS4 Compact 50/8
399_GB 12[1]	438_ENX 22 EMT	456_EPOS4 Module 50/15
		456_EPOS4 Compact 50/15
		457_EPOS4 Module 60/20 STO
		461_EPOS4 Comp. 60/20 STO
		462_EPOS4 70/15
		462_EPOS4 Disk 60/8
		463_EPOS4 Disk 60/12

[1]on request

© 2026 maxon. All rights reserved. Subject to change.

EC-i 70 □70 mm, brushless, 800 watt

High Torque

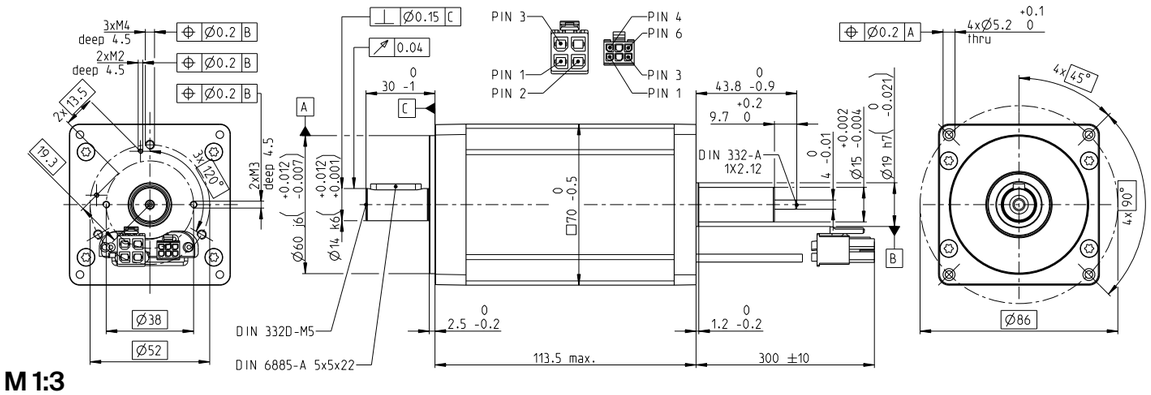

M 1:3

Stock program
Standard program
Special program (on request)

		Part numbers	
	with Hall sensors	940649	952543
Motor data (provisional)			
Values at nominal voltage			
1 Nominal voltage	V	48	60
2 No load speed	rpm	3670	3730
3 No load current	mA	751	614
4 Nominal speed	rpm	3290	3340
5 Nominal torque	mNm	2250	2360
6 Nominal current (max. continuous current)	A	17.3	14.7
7 Stall torque	mNm	21600	22900
8 Stall current	A	649	600
9 Max. efficiency	%	93.2	93.6
Characteristics			
10 Terminal resistance phase to phase	Ω	0.074	0.100
11 Terminal inductance phase to phase	mH	0.17	0.258
12 Torque constant	mNm/A	124	153
13 Speed constant	rpm/V	76.9	62.5
14 Speed/torque gradient	rpm/mNm	0.0458	0.0409
15 Mechanical time constant	ms	0.541	0.483
16 Rotor inertia	gcm²	1130	1130

Specifications

Thermal data

17	Thermal resistance housing-ambient	1.66 K/W
18	Thermal resistance winding-housing	0.43 K/W
19	Thermal time constant winding	45.5 s
20	Thermal time constant motor	1710 s
21	Ambient temperature	-40...+100 °C
22	Max. winding temperature	+155 °C

Mechanical data (preloaded ball bearings)

23	Max. speed	4000 rpm
24	Axial play at axial load < 28 N	0 mm
	> 28 N	0.22 mm
25	Radial play	preloaded
26	Max. axial load (dynamic)	22 N
27	Max. force for press fits (static)	270 N
	(static, shaft supported)	5400 N
28	Max. radial load, 15 mm from flange	300 N

Other specifications

29	Number of pole pairs	8
30	Number of phases	3
31	Weight of motor	2060 g

Values listed in the table are nominal.

Operating range — Comments

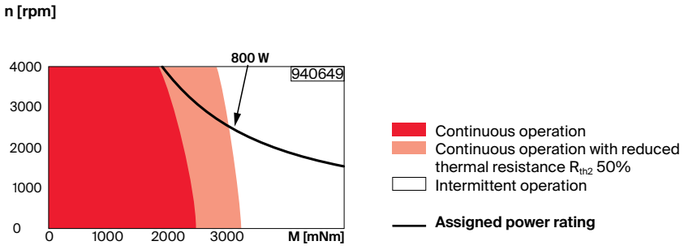

Modular system — Details on catalog page 56

Gearheads	Stages [opt.]	Sensors	Control Electronics
371_GPX 70A/UP	1–2	420_ENX 16 EASY	448_ESCON2 Module 60/30
372_GPX 70 LN	1–2	421_ENX 16 EASY XT	450_ESCON2 Compact 60/30
399_GB 12	1	436_ENX 16 EASY Abs.	456_EPOS4 Module 50/15
400_GB 9	1	437_ENX 16 EASY Abs. XT	456_EPOS4 Module 60/20
401_GB 65	2	438_ENX 22 EMT	460_EPOS4 Compact 50/15
			461_EPOS4 Compact 60/20
		Accessories	461_EPOS4 Compact 60/20 STO
		482_Brake AB 60	461_EPOS4 Module 60/20 STO
			462_EPOS4 70/15

Connection motor (Cable AWG 12)

red	Motor winding 1	Pin 1
black	Motor winding 2	Pin 2
white	Motor winding 3	Pin 3
	N.C.	Pin 4

Connector	**Article number**
Molex	171692-0104

Connection sensor (Cable AWG 26)

yellow	Hall sensor 1	Pin 1
brown	Hall sensor 2	Pin 2
grey	Hall sensor 3	Pin 3
blue	GND	Pin 4
green	V_{Hall} 4.5...24 VDC	Pin 5
	N.C.	Pin 6

Connector	**Article number**
Molex	430-25-0600

Wiring diagram for Hall sensors see p. 73

© 2026 maxon. All rights reserved. Subject to change.

ECX PRIME 16 M ∅16 mm, brushless, BLDC motor

Key Data: 25/32 W, 14.6 mNm, 25 000 rpm

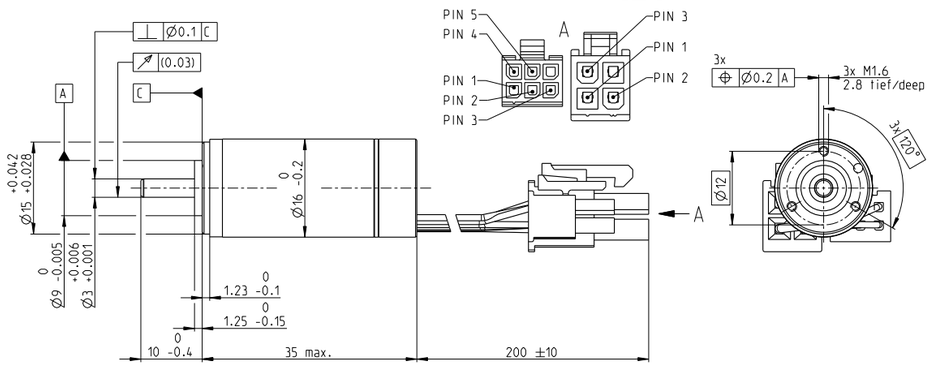

M 1:1

Motor data				
1_ Nominal voltage	V	12	18	24
2_ No load speed	rpm	15600	15600	15600
3_ No load current	mA	103	69	51.8
4_ Nominal speed	rpm	12800	12800	12900
5_ Nominal torque	mNm	14.2	14.2	14.6
6_ Nominal current (max. continuous current)	A	2.02	1.35	1.04
7_ Stall torque	mNm	85.6	86.5	91.5
8_ Stall current	A	11.7	7.91	6.27
9_ Max. efficiency	%	82.4	82.5	83
10_ Terminal resistance	Ω	1.02	2.28	3.83
11_ Terminal inductance	mH	0.0485	0.111	0.193
12_ Torque constant	mNm/A	7.29	10.9	14.6
13_ Speed constant	rpm/V	1310	873	655
14_ Speed/torque gradient	rpm/mNm	184	182	172
15_ Mechanical time constant	ms	2.31	2.28	2.16
16_ Rotor inertia	gcm²	1.2	1.2	1.2

Thermal data		
17_ Thermal resistance housing-ambient	K/W	17.3
18_ Thermal resistance winding-housing	K/W	1.98
19_ Thermal time constant winding	s	3.75
20_ Thermal time constant motor	s	209
21_ Ambient temperature	°C	-20...+100
22_ Max. winding temperature	°C	155
Mechanical data ball bearings		
23_ Max. speed	rpm	25 000
24_ Axial play	mm	0...0.14
Preload	N	1.0
Direction of force		push
25_ Radial play		preloaded
26_ Max. axial load (dynamic)	N	1.0
27_ Max. force for press fits (static)	N	50
(static, shaft supported)	N	1000
28_ Max. radial load [mm from flange]	N	10 [5]
Other specifications		
29_ Number of pole pairs		2
30_ Number of phases		3
31_ Weight of motor	g	43
32_ Typical noise level [rpm]	dBA	50 [20 000]

Operating range

n [rpm] **winding 12 V**

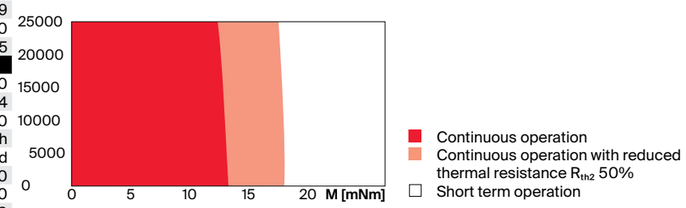

Modular system — Details on catalog page 56

Gearheads	Stages [opt.]	Sensors	Control Electronics
342_GPX 16 A/C	1–2	418_ENX 10 EASY	443_DEC Module 24/2
343_GPX 16 LN/LZ	1–2	419_ENX 10 EASY XT	447_ESCON2 Nano 24/2
344_GPX 16 HP	2–3	420_ENX 16 EASY	449_ESCON2 Compact 60/2
347_GPX 19 A/C	3–4	421_ENX 16 EASY XT	454_EPOS4 Micro 24/1.5
348_GPX 19 LN/LZ	3–4	432_ENX 16 RIO	455_EPOS4 Module 24/1.5
349_GPX 19 HP	4	436_ENX 16 EASY Abs.	458_EPOS4 Compact 24/1.5
390_GSW 20 HP		437_ENX 16 EASY Abs. XT	

Connection motor (Cable AWG 22)

Pin 1	Motor winding 1 (red)
Pin 2	Motor winding 2 (black)
Pin 3	Motor winding 3 (white)
Pin 4	N.C.

Connector, Part number
Molex, 39-01-2040

Connection sensors (Cable AWG 26)

Pin 1	Hall sensor 1 (yellow)
Pin 2	Hall sensor 2 (brown)
Pin 3	Hall sensor 3 (grey)
Pin 4	GND (blue)
Pin 5	V_{Hall} 3...24 VDC (orange)
Pin 6	N.C.

Connector, Part number
Molex, 430-25-0600
Wiring diagram for Hall sensors see p. 74

Configuration

Flange back: end cap/flange with thread holes
Shaft front/back: length/diameter
Electric connection: cable length/connector/connection alignment

© 2026 maxon. All rights reserved. Subject to change.

EC frameless DT 50 M ∅54 mm, brushless, 210 watt

Dynamic Torque, potted in mounting flange

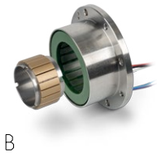

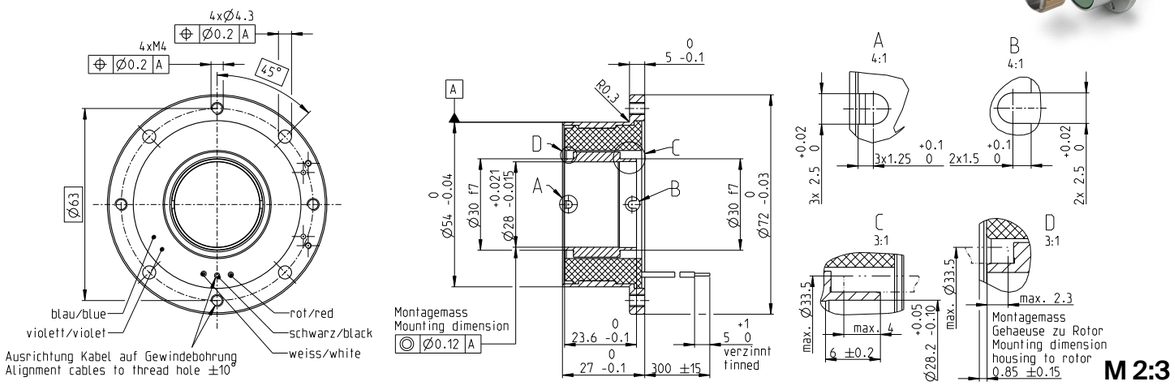

Stock program
Standard program
Special program (on request)

		Part numbers							
	sensorless	758031							
Motor data[1]									
Values at nominal voltage									
1 Nominal voltage	V	48							
2 No load speed	rpm	4330							
3 No load current	mA	109							
4 Nominal speed	rpm	3490							
5 Nominal torque	mNm	600							
6 Nominal current (max. continuous current)	A	5.16							
7 Stall torque	mNm	2770							
8 Stall current	A	64.2							
9 Max. efficiency	%	91.9							
Characteristics									
10 Terminal resistance phase to phase	Ω	0.748							
11 Terminal inductance phase to phase	mH	0.571							
12 Torque constant	mNm/A	105							
13 Speed constant	rpm/V	90.7							
14 Speed/torque gradient	rpm/mNm	0.644							
15 Mechanical time constant	ms	0.67							
16 Rotor inertia	gcm^2	98.8							

Specifications

Thermal data

17	Thermal resistance housing-ambient (R_{th2})	2.8...5.0 K/W
18	Thermal resistance winding-housing (R_{th1})	0.412 K/W
19	Thermal time constant winding	7.11 s
20	Thermal time constant motor	678 s
21	Ambient temperature	-40...+100 °C
22	Max. winding temperature	+155 °C

Mechanical data

23	Max. speed	rpm

Other specifications

29	Number of pole pairs	10
30	Number of phases	3
31	Weight of motor (with mounting flange made of stainless steel)	270 g
	Weight for integration (without mounting flange)	156 g

Values listed in the table are nominal.

Connection motor (Cable AWG 18)
red Motor winding 1
black Motor winding 2
white Motor winding 3

Connection NTC (Cable AWG 24)
purple NTC
blue NTC
Resistance 25 °C: 5 kΩ ±1%, beta (25–85 °C): 3490 K

Comment
For Torque control data, refer to "Installation Manual" available on maxon online shop.

Operating range

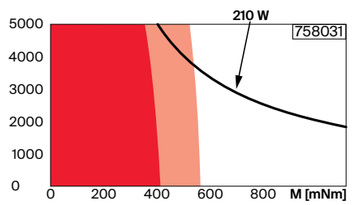

Continuous operation range at R_{th2} of 5.0 K/W
With mounting flange
Continuous operation range at R_{th2} of 2.8 K/W
Installed in a ∅62 mm aluminum housing
Mounted on an aluminum plate sized
125×125×10 mm
Intermittent operation

Assigned power rating

Comments

[1]The nominal data refer to a thermal resistance, housing-ambient (R_{th2}) of 2.8 K/W.

Modular system Details on catalog page 60

Sensors
428_TSX 50 MAG with commutation signals

Control Electronics
447_ESCON2 Micro 60/5
454_EPOS4 Micro 24/5 CAN
454_EPOS4 Micro 24/5 EtherCAT
455_EPOS4 Module 50/5
458_EPOS4 Compact 50/5
461_EPOS4 50/5
462_EPOS4 Disk 60/8 CAN
463_EPOS4 Disk 60/8 EtherCAT

Variants
maxon integration into customer housing on request.
Other coil designs on request.

© 2026 maxon. All rights reserved. Subject to change.

EC frameless DT 65 M ∅70 mm, brushless, 375 watt

Dynamic Torque, potted in mounting flange

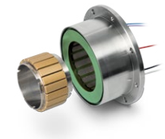

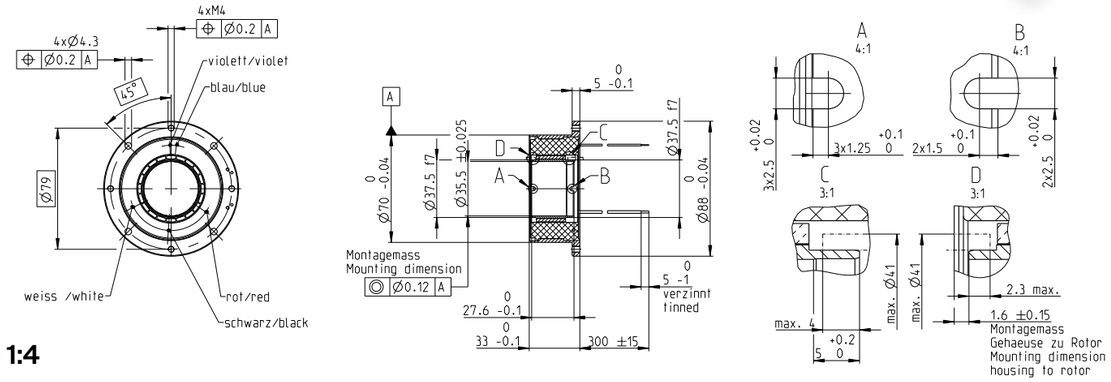

M 1:4

Stock program
Standard program
Special program (on request)

		Part numbers							
	sensorless	783332							
Motor data[1]									
Values at nominal voltage									
1 Nominal voltage	V	48							
2 No load speed	rpm	2590							
3 No load current	mA	150							
4 Nominal speed	rpm	2050							
5 Nominal torque	mNm	1500							
6 Nominal current (max. continuous current)	A	7.56							
7 Stall torque	mNm	5660							
8 Stall current	A	103							
9 Max. efficiency	%	92.4							
Characteristics									
10 Terminal resistance phase to phase	Ω	0.466							
11 Terminal inductance phase to phase	mH	0.779							
12 Torque constant	mNm/A	176							
13 Speed constant	rpm/V	54.2							
14 Speed/torque gradient	rpm/mNm	0.143							
15 Mechanical time constant	ms	0.41							
16 Rotor inertia	gcm^2	275							

Specifications

Thermal data

17	Thermal resistance housing-ambient (R_{th2})	1.6...3.4 K/W
18	Thermal resistance winding-housing	0.207 K/W
19	Thermal time constant winding	9.1 s
20	Thermal time constant motor	1250 s
21	Ambient temperature	-40...+100 °C
22	Max. winding temperature	+155 °C

Mechanical data

23	Max. speed	5000 rpm

Other specifications

29	Number of pole pairs	10
30	Number of phases	3
31	Weight of motor (with mounting flange made of stainless steel)	524 g
	Weight for integration (without mounting flange)	332 g

Values listed in the table are nominal.

Connection motor (Cable AWG 18)
red Motor winding 1
black Motor winding 2
white Motor winding 3

Connection NTC (Cable AWG 24)
purple NTC
blue NTC
Resistance 25 °C: 5 kΩ ±1%, beta (25–85 °C): 3490 K

Comment
For Torque control data, refer to "Installation Manual" available on maxon online shop.

Operating range

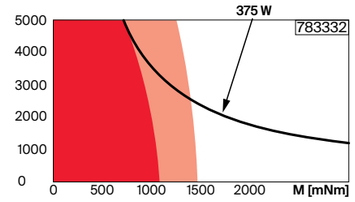

Continuous operation range at R_{th2} of 3.4 K/W
With mounting flange
Continuous operation range at R_{th2} of 1.6 K/W
Installed in a ∅78 mm aluminum housing
Mounted on an aluminum plate sized
160×160×10 mm
Intermittent operation

Assigned power rating

Comments

[1]The nominal data refer to a thermal resistance, housing-ambient (R_{th2}) of 1.6 K/W.

Modular system Details on catalog page 60

Sensors
429_TSX 65 MAG with commutation signals

Control Electronics
447_ESCON2 Micro 60/5
448_ESCON2 Module 60/12
449_ESCON2 Compact 60/12
455_EPOS4 Module 50/8
459_EPOS4 Compact 50/8
462_EPOS4 70/15
462_EPOS4 Disk 60/8 CAN
463_EPOS4 Disk 60/8 EtherCAT

Variants
maxon integration into customer housing on request.
Other coil designs on request.

© 2026 maxon. All rights reserved. Subject to change.

EC frameless DT 85 M ∅90 mm, brushless, 570 watt

Dynamic Torque, potted in mounting flange

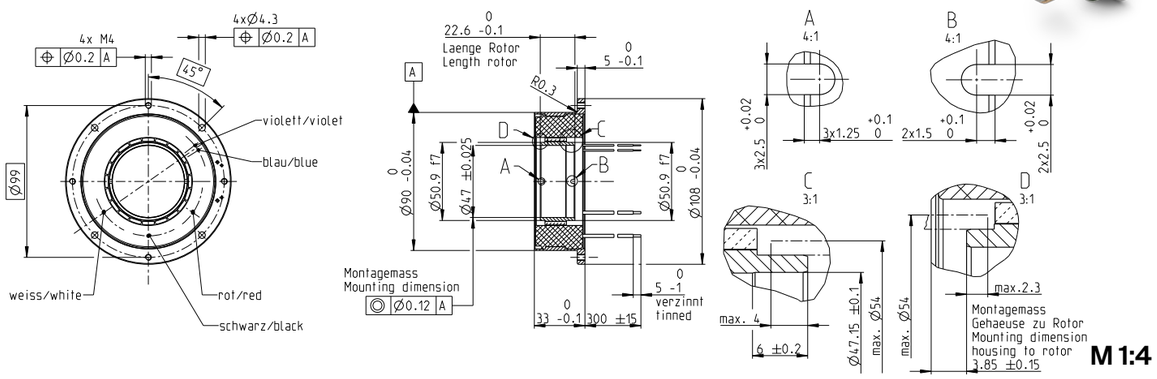

M 1:4

Stock program
Standard program
Special program (on request)

		Part numbers
sensorless		740953
Motor data[1]		
Values at nominal voltage		
1 Nominal voltage	V	48
2 No load speed	rpm	3410
3 No load current	mA	283
4 Nominal speed	rpm	2760
5 Nominal torque	mNm	2190
6 Nominal current (max. continuous current)	A	14.3
7 Stall torque	mNm	11500
8 Stall current	A	306
9 Max. efficiency	%	93.9
Characteristics		
10 Terminal resistance phase to phase	Ω	0.16
11 Terminal inductance phase to phase	mH	0.367
12 Torque constant	mNm/A	134
13 Speed constant	rpm/V	71.4
14 Speed/torque gradient	rpm/mNm	0.084
15 Mechanical time constant	ms	0.57
16 Rotor inertia	gcm²	650

Specifications

Thermal data
17 Thermal resistance housing-ambient (R_{th2}) 1.1...2.4 K/W
18 Thermal resistance winding-housing 0.3 K/W
19 Thermal time constant winding 21 s
20 Thermal time constant motor 810 s
21 Ambient temperature -40...+100°C
22 Max. winding temperature +155°C

Mechanical data
23 Max. speed 4000 rpm

Other specifications
29 Number of pole pairs 10
30 Number of phases 3
31 Weight of motor 741 g
(with mounting flange made of stainless steel)
Weight for integration 517 g
(without mounting flange)

Values listed in the table are nominal.

Connection motor (Cable AWG 16)
red Motor winding 1
black Motor winding 2
white Motor winding 3

Connection NTC (Cable AWG 24)
purple NTC
blue NTC
Resistance 25°C: 5 kΩ ±1%, beta (25–85°C): 3490 K

Comment
For Torque control data, refer to "Installation Manual" available on maxon online shop.

Operating range

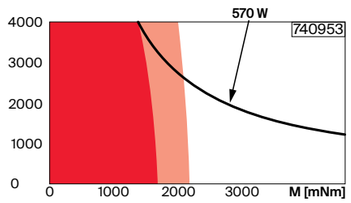

Continuous operation range at R_{th2} of 2.4 K/W
With mounting flange
Continuous operation range at R_{th2} of 1.1 K/W
Installed in a ∅93 mm aluminum housing
Mounted on an aluminum plate sized
210×210×10 mm
Intermittent operation

Assigned power rating

Comments

[1]The nominal data refer to a thermal resistance, housing-ambient (R_{th2}) of 1.1 K/W.

Modular system Details on catalog page 60

Sensors
430_TSX 85 MAG with commutation signals

Control Electronics
447_ESCON2 Micro 60/5
448_ESCON2 Module 60/30
449_ESCON2 Compact 60/12
450_ESCON2 Compact 60/30
456_EPOS4 Module 50/15
460_EPOS4 Compact 50/15
462_EPOS4 70/15
462_EPOS4 Disk 60/8 CAN
463_EPOS4 Disk 60/8 EtherCAT
463_EPOS4 Disk 60/12 CAN
463_EPOS4 Disk 60/12 EtherCAT

Variants
maxon integration into customer housing on request.
Other coil designs on request.

© 2026 maxon. All rights reserved. Subject to change.

EC frameless HT 60 M ∅60 mm, brushless, 270 watt

High Torque

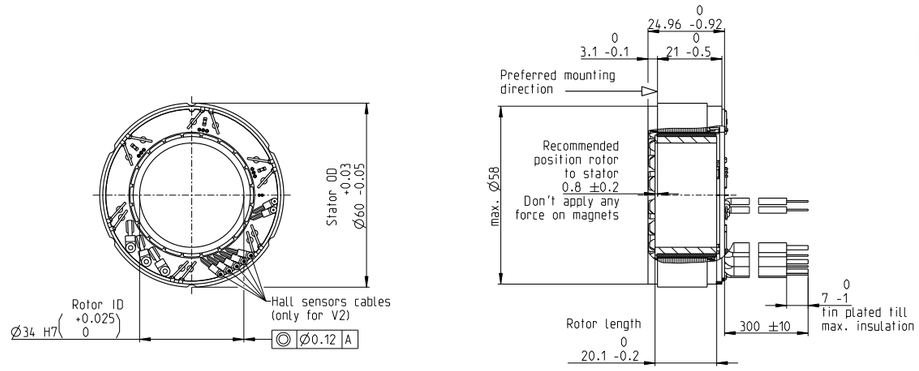

M 1:2

Stock program
Standard program
Special program (on request)

		Part numbers
V1 sensorless		968345
V2 with Hall sensors		936176
Motor data[1] (provisional)		
Values at nominal voltage		
1 Nominal voltage	V	48
2 No load speed	rpm	4640
3 No load current	mA	252
4 Nominal speed	rpm	3850
5 Nominal torque	mNm	613
6 Nominal current (max. continuous current)	A	5.74
7 Stall torque	mNm	3460
8 Stall current	A	96.9
9 Max. efficiency	%	90.0
Characteristics		
10 Terminal resistance phase to phase	Ω	0.495
11 Terminal inductance phase to phase	mH	0.47
12 Torque constant	mNm/A	98.0
13 Speed constant	rpm/V	97.4
14 Speed/torque gradient	rpm/mNm	0.492
15 Mechanical time constant	ms	0.913
16 Rotor inertia	gcm²	177

Specifications

Thermal data
17 Thermal resistance housing-ambient 2.0...4 K/W
18 Thermal resistance winding-housing (R_{th1}) 1.65 K/W
19 Thermal time constant winding 37.8 s
20 Thermal time constant motor 231 s
21 Ambient temperature -40...+100°C
22 Max. winding temperature +155°C

Mechanical data
23 Max. speed 8000 rpm

Other specifications
29 Number of pole pairs 10
30 Number of phases 3
31 Weight of motor 226 g
Values listed in the table are nominal.

Connection motor (cable AWG 16)

	V1	V2
red	Motor winding 1	Motor winding 1
black	Motor winding 2	Motor winding 2
white	Motor winding 3	Motor winding 3

Commutation (cable AWG 26)
yellow Hall sensors 1
brown Hall sensors 2
grey Hall sensors 3
blue GND
green V_{hall} 4.5...24 VDC

Connection NTC (cable AWG 26)
black NTC
black NTC
Resistance 25°C: 10 kΩ ±1%, beta (25–85°C): 3480 K

Comment
For Torque control data, refer to "Installation Manual" available on maxon online shop.

Operating range

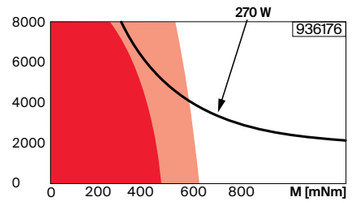

Continuous operation range at R_{th2} of 4.0 K/W
Installed in a ∅73 mm aluminum housing
Continuous operation range at R_{th2} of 2.0 K/W
Installed in a ∅73 mm aluminum housing
Mounted on an aluminum plate sized
150x150x6 mm
Intermittent operation

Assigned power rating

Comments

[1]The nominal data refer to a thermal resistance, housing-ambient (R_{th2}) of 2.0 K/W.

Modular system Details on catalog page 60

Control Electronics
447_ESCON2 Micro 60/5
449_ESCON2 Compact 60/5
454_EPOS4 Micro 24/5 CAN
454_EPOS4 Micro 24/5 EtherCAT
455_EPOS4 Module 50/5
458_EPOS4 Compact 50/5
461_EPOS4 50/5
462_EPOS4 Disk 60/8

Variants
Other coil designs on request.

© 2026 maxon. All rights reserved. Subject to change.

EC frameless HT 76 M ∅76 mm, brushless, 500 watt

High Torque

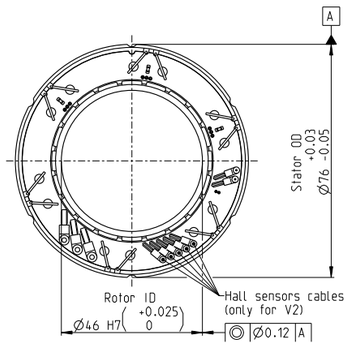

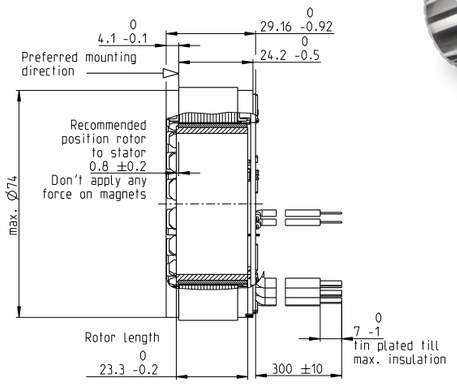

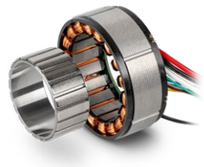

M 1:2

Stock program
Standard program
Special program (on request)

		Part numbers
V1 sensorless		968369
V2 with Hall sensors		934928
Motor data[1] (provisional)		
Values at nominal voltage		
1 Nominal voltage	V	48
2 No load speed	rpm	3750
3 No load current	mA	411
4 Nominal speed	rpm	3180
5 Nominal torque	mNm	1270
6 Nominal current (max. continuous current)	A	9.65
7 Stall torque	mNm	7000
8 Stall current	A	223
9 Max. efficiency	%	91.5
Characteristics		
10 Terminal resistance phase to phase	Ω	0.215
11 Terminal inductance phase to phase	mH	0.337
12 Torque constant	mNm/A	122
13 Speed constant	rpm/V	78.6
14 Speed/torque gradient	rpm/mNm	0.14
15 Mechanical time constant	ms	0.673
16 Rotor inertia	gcm²	461

Specifications

Thermal data

17	Thermal resistance housing-ambient	1.5...2.9 K/W
18	Thermal resistance winding-housing (R_{th1})	1.26 K/W
19	Thermal time constant winding	54 s
20	Thermal time constant motor	1320 s
21	Ambient temperature	-40...+100°C
22	Max. winding temperature	+155°C

Mechanical data

23	Max. speed	7000 rpm

Other specifications

29	Number of pole pairs	10
30	Number of phases	3
31	Weight of motor	376 g

Values listed in the table are nominal.

Connection motor (cable AWG 16)

	V1	V2
red	Motor winding 1	Motor winding 1
black	Motor winding 2	Motor winding 2
white	Motor winding 3	Motor winding 3

Commutation (cable AWG 26)

yellow	Hall sensors 1
brown	Hall sensors 2
grey	Hall sensors 3
blue	GND
green	V_{hall} 4.5...24 VDC

Connection NTC (cable AWG 26)
black NTC
black NTC
Resistance 25°C: 10 kΩ ±1%, beta (25–85°C): 3480 K

Comment
For Torque control data, refer to "Installation Manual" available on maxon online shop.

Operating range

n [rpm]

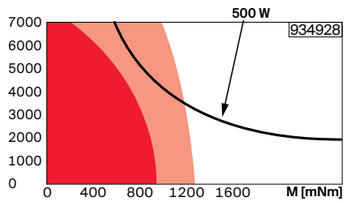

Comments

[1]The nominal data refer to a thermal resistance, housing-ambient (R_{th2}) of 1.5 K/W.

Continuous operation range at R_{th2} of 2.9 K/W
Installed in a ∅89 mm aluminum housing
Continuous operation range at R_{th2} of 1.5 K/W
Installed in a ∅89 mm aluminum housing
Mounted on an aluminum plate sized 190x190x10 mm
Intermittent operation

Assigned power rating

Modular system Details on catalog page 60

Control Electronics
447_ESCON2 Micro 60/5
448_ESCON2 Module 60/12
449_ESCON2 Compact 60/5
449_ESCON2 Compact 60/12
450_ESCON2 60/12
455_EPOS4 Module 50/8
459_EPOS4 Compact 50/8
462_EPOS4 70/15
462_EPOS4 Disk 60/8

Variants

Other coil designs on request.

© 2026 maxon. All rights reserved. Subject to change.

EC frameless HT 90 M ∅90 mm, brushless, 670 watt

High Torque

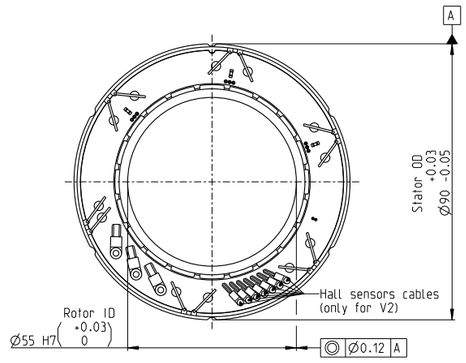

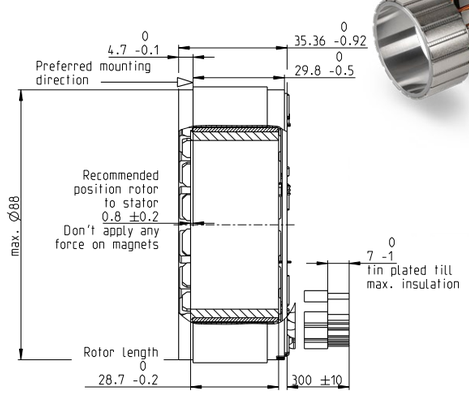

M 1:2

Stock program
Standard program
Special program (on request)

		Part numbers
V1 sensorless		968407
V2 with Hall sensors		937612
Motor data[1] (provisional)		
Values at nominal voltage		
1 Nominal voltage	V	48
2 No load speed	rpm	2490
3 No load current	mA	479
4 Nominal speed	rpm	2130
5 Nominal torque	mNm	2770
6 Nominal current (max. continuous current)	A	14.0
7 Stall torque	mNm	10 600
8 Stall current	A	321
9 Max. efficiency	%	92.4
Characteristics		
10 Terminal resistance phase to phase	Ω	0.149
11 Terminal inductance phase to phase	mH	0.325
12 Torque constant	mNm/A	183
13 Speed constant	rpm/V	52.2
14 Speed/torque gradient	rpm/mNm	0.043
15 Mechanical time constant	ms	0.537
16 Rotor inertia	gcm²	1200

Specifications

Thermal data

17	Thermal resistance housing-ambient	1.0...2.3 K/W
18	Thermal resistance winding-housing (R_{th1})	1.08 K/W
19	Thermal time constant winding	77.7 s
20	Thermal time constant motor	341 s
21	Ambient temperature	-40...+100°C
22	Max. winding temperature	+155°C

Mechanical data

23	Max. speed	5000 rpm

Other specifications

29	Number of pole pairs	10
30	Number of phases	3
31	Weight of motor	649 g

Values listed in the table are nominal.

Connection motor (cable AWG 14)

	V1	V2
red	Motor winding 1	Motor winding 1
black	Motor winding 2	Motor winding 2
white	Motor winding 3	Motor winding 3

Commutation (cable AWG 26)

yellow	Hall sensors 1
brown	Hall sensors 2
grey	Hall sensors 3
blue	GND
green	V_{hall} 4.5...24 VDC

Connection NTC (cable AWG 26)
black NTC
black NTC
Resistance 25°C: 10 kΩ ±1%, beta (25–85°C): 3480 K

Comment
For Torque control data, refer to "Installation Manual" available on maxon online shop.

Operating range

n [rpm]

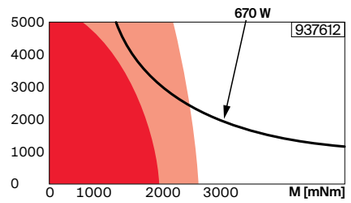

Comments

[1]The nominal data refer to a thermal resistance, housing-ambient (R_{th2}) of 1.0 K/W.

Continuous operation range at R_{th2} of 2.3 K/W
Installed in a ∅103 mm aluminum housing
Continuous operation range at R_{th2} of 1.0 K/W
Installed in a ∅103 mm aluminum housing
Mounted on an aluminum plate sized 225x225x10 mm
Intermittent operation

Assigned power rating

Modular system Details on catalog page 60

Control Electronics
448_ESCON2 Module 60/12
448_ESCON2 Module 60/30
449_ESCON2 Compact 60/12
450_ESCON2 Compact 60/30
450_ESCON2 60/12
456_EPOS4 Module 50/15
457_EPOS4 Module 60/20 STO
460_EPOS4 Compact 50/15
461_EPOS4 Compact 60/20 STO
462_EPOS4 70/15
463_EPOS4 Disk 60/12

Variants

Other coil designs on request.

© 2026 maxon. All rights reserved. Subject to change.

GPX 52 ∅52 mm, planetary gearhead

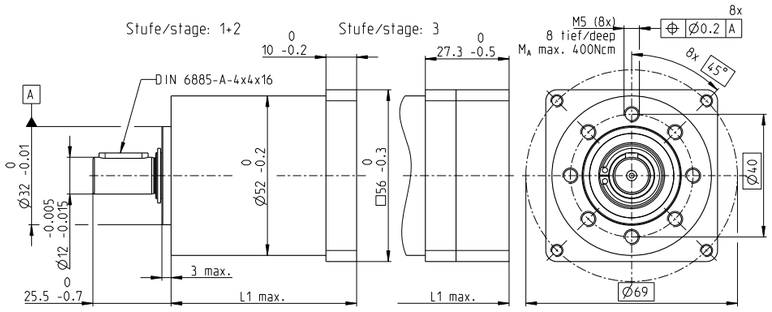

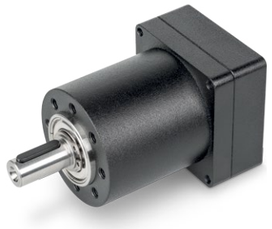

M 1:2

Key data		A Standard version	UP Ultra performance
Max. transmittable power	W	400	600
Max. continuous torque	Nm	30.0	45.0
Max. continuous input speed	rpm	6000	6000
Ambient temperature	°C	-40...+100	-40...+100
Bearing at output		Ball bearing	Ball bearing

Operating range (output shaft)

Continuous operation

Intermittent operation

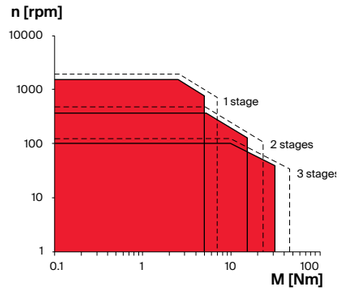

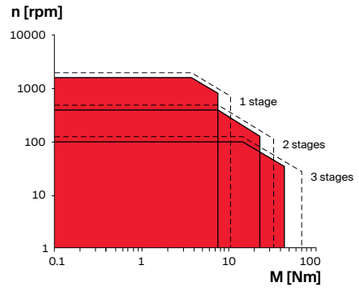

Specifications		A Standard version			UP Ultra performance		
Number of stages		1	2	3	1	2	3
Max. transmittable power (continuous)	W	400	200	100	600	300	150
Max. transmittable power (intermittent)	W	500	250	125	750	375	188
Max. continuous torque	Nm	5.0	15.0	30.0	7.5	22.5	45.0
Max. intermittent torque	Nm	7.0	23.0	45.0	10.5	34.5	67.5
Max. continuous input speed	rpm	6000	6000	6000	6000	6000	6000
Max. intermittent input speed	rpm	7500	7500	7500	7500	7500	7500
Max. efficiency	%	95	92	89	95	92	89
Average backlash no load	°	0.5	0.6	0.8	0.3	0.4	0.5
Max. axial load (dynamic)	N	200	200	200	200	200	200
Max. permissible radial load, 10 mm from flange	N	420	630	900	420	630	900
Gearhead length L1[1]	mm	59.5	76.6	93.9	59.5	76.6	93.9
Weight	g	545	713	930	552	719	926

Configuration	A Standard version			UP Ultra performance		
Number of stages	1	2	3	1	2	3
Reduction	3.9, 5.3, 6.6	16, 21, 26, 28, 35, 44	62, 83, 103, 111, 138, 172	3.9, 5.3, 6.6	16, 21, 26, 28, 35, 44	62, 83, 103, 111, 138, 172
Version	Standard/noise reduced/ultra performance					
Flange	Standard flange					
Shaft	Length/diameter/feather key					

Modular system		Page
Servo Motors	№ of stages [opt.]	
IDX 56 S IE	1–3	109
IDX 56 M IE	1–3	110
IDX 56 L IE	1–3	111
IDX 56 S	1–3	119
IDX 56 M	1–3	120
IDX 56 L	1–3	121

[1]This length may vary depending on the configuration and choice of motor. The effective length is calculated at the end of the configuration process.

© 2026 maxon. All rights reserved. Subject to change.

GPX 52 ∅52 mm, planetary gearhead

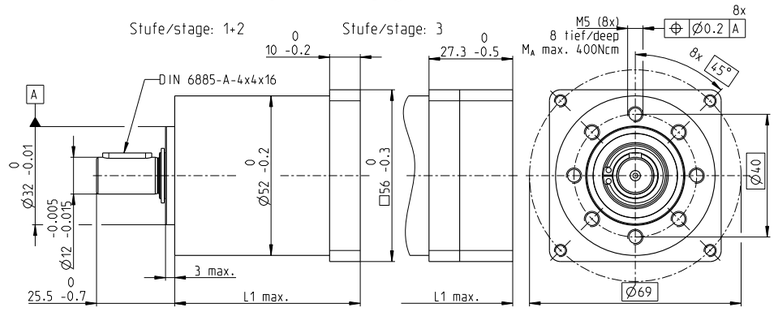

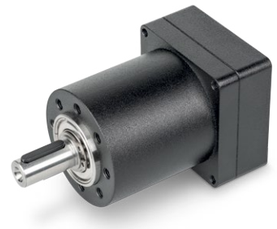

M 1:2

Key data		LN Noise reduced
Max. transmittable power	W	320
Max. continuous torque	Nm	24.0
Max. continuous input speed	rpm	6000
Ambient temperature	°C	-20...+85
Bearing at output		Ball bearing
Typical noise level	dBA	-5 compared to standard configuration

Operating range (output shaft)

Continuous operation

Intermittent operation

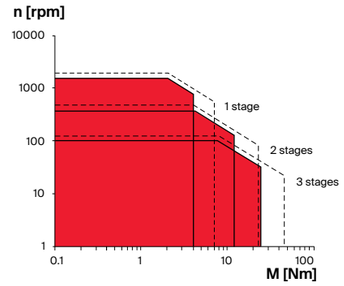

Specifications		LN Noise reduced		
Number of stages		1	2	3
Max. transmittable power (continuous)	W	320	160	80
Max. transmittable power (intermittent)	W	400	200	100
Max. continuous torque	Nm	4.0	12.0	24.0
Max. intermittent torque	Nm	7.0	23.0	45.0
Max. continuous input speed	rpm	6000	6000	6000
Max. intermittent input speed	rpm	7500	7500	7500
Max. efficiency	%	95	92	89
Average backlash no load	°	0.5	0.6	0.8
Max. axial load (dynamic)	N	200	200	200
Max. permissible radial load, 10 mm from flange	N	420	630	900
Gearhead length L1[1]	mm	59.5	93.9	93.9
Weight	g	544	712	995

Configuration	LN Noise reduced		
Number of stages	1	2	3
Reduction	3.9, 5.3, 6.6	16, 21, 26, 28, 35, 44	62, 83, 103, 111, 138, 172
Version	Standard/noise reduced/ultra performance		
Flange	Standard flange		
Shaft	Length/diameter/feather key		

Modular system		Page
Servo Motors	№ of stages [opt.]	
IDX 56 S IE	1–3	109
IDX 56 M IE	1–3	110
IDX 56 L IE	1–3	111
IDX 56 S	1–3	119
IDX 56 M	1–3	120
IDX 56 L	1–3	121

[1]This length may vary depending on the configuration and choice of motor. The effective length is calculated at the end of the configuration process.

© 2026 maxon. All rights reserved. Subject to change.

GPX 52 ∅52 mm, planetary gearhead

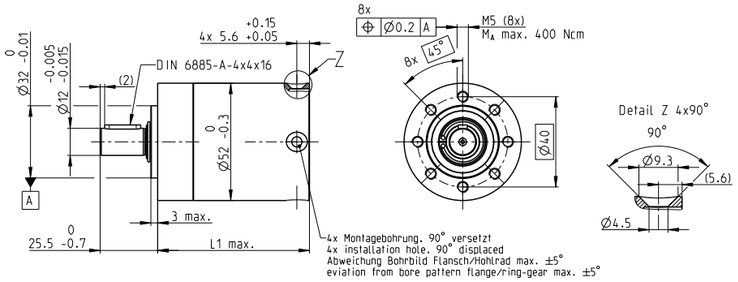

M 1:3

Key data		A Standard version	UP Ultra performance
Max. transmittable power	W	400	600
Max. continuous torque	Nm	30.0	45.0
Max. continuous input speed	rpm	6000	6000
Ambient temperature	°C	-40...+100	-40...+100
Bearing at output		Ball bearing	Ball bearing

Operating range (output shaft)

Continuous operation

Intermittent operation

A Standard version

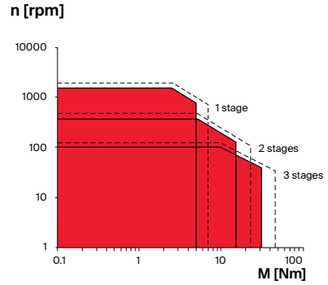

UP Ultra performance

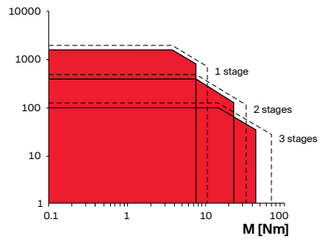

Specifications		A Standard version			UP Ultra performance		
Number of stages		1	2	3	1	2	3
Max. transmittable power (continuous)	W	400	200	100	600	300	150
Max. transmittable power (intermittent)	W	500	250	125	750	375	188
Max. continuous torque	Nm	5.0	15.0	30.0	7.5	22.5	45.0
Max. intermittent torque	Nm	7.0	23.0	45.0	10.5	34.5	67.5
Max. continuous input speed	rpm	6000	6000	6000	6000	6000	6000
Max. intermittent input speed	rpm	7500	7500	7500	7500	7500	7500
Max. efficiency	%	95	95	89	95	92	89
Average backlash no load	°	0.5	0.6	0.8	0.3	0.4	0.5
Max. axial load (dynamic)	N	200	200	200	200	200	200
Max. permissible radial load, 10 mm from flange	N	420	630	900	420	630	900
Gearhead length L1[1]	mm	50.2	67.3	84.4	50.2	67.3	84.4
Weight	g	408	596	775	409	523	764

Configuration	A Standard version			UP Ultra performance		
Number of stages	1	2	3	1	2	3
Reduction	3.9, 5.3, 6.6	16, 21, 26, 28, 35, 44	62, 83, 103, 111, 138, 172	3.9, 5.3, 6.6	16, 21, 26, 28, 35, 44	62, 83, 103, 111, 138, 172
Version	Standard/noise reduced/ultra performance					
Flange	Standard flange					
Shaft	Length/diameter/feather key					

Modular system		Page
BLDC Motors	№ of stages [opt.]	
EC-i 52	1–3	207–208

[1]This length may vary depending on the configuration and choice of motor. The effective length is

© 2026 maxon. All rights reserved. Subject to change.

GPX 52 ∅52 mm, planetary gearhead

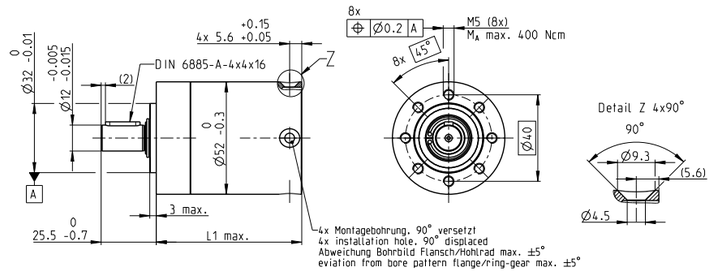

M 1:3

Key data		LN Noise reduced
Max. transmittable power	W	400
Max. continuous torque	Nm	30.0
Max. continuous input speed	rpm	6000
Ambient temperature	°C	-40...+100
Bearing at output		Ball bearing
Typical noise level	dBA	-5 dBA compared to standard configuration

Operating range (output shaft)

Continuous operation

Intermittent operation

LN Noise reduced

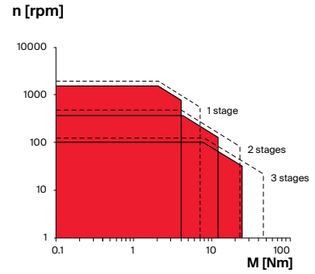

Specifications		LN Noise reduced		
Number of stages		1	2	3
Max. transmittable power (continuous)	W	320	160	80
Max. transmittable power (intermittent)	W	400	200	100
Max. continuous torque	Nm	4.0	12.0	24.0
Max. intermittent torque	Nm	7.0	23.0	45.0
Max. continuous input speed	rpm	6000	6000	6000
Max. intermittent input speed	rpm	7500	7500	7500
Max. efficiency	%	95	92	89
Average backlash no load	°	0.5	0.6	0.8
Max. axial load (dynamic)	N	200	200	200
Max. permissible radial load, 10 mm from flange	N	420	630	900
Gearhead length L1[1]	mm	50.2	67.3	84.4
Weight	g	473	564	752

Configuration	LN Noise reduced		
Number of stages	1	2	3
Reduction	3.9, 5.3, 6.6	16, 21, 26, 28, 35, 44	62, 83, 103, 111, 138, 172
Version	Standard/noise reduced/ultra performance		
Flange	Standard flange		
Shaft	Length/diameter/feather key		

Modular system		Page
BLDC Motors	№ of stages [opt.]	
EC-i 52	1–3	207–208

[1]This length may vary depending on the configuration and choice of motor. The effective length is calculated at the end of the configuration process.

© 2026 maxon. All rights reserved. Subject to change.

GPX 70 ∅70 mm, planetary gearhead

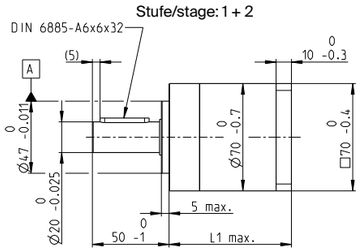

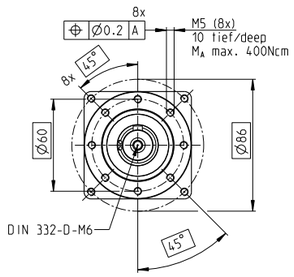

M 1:4

Key data		A Standard version	UP Ultra performance
Max. transmittable power	W	850	1200
Max. continuous torque	Nm	30.0	70.0
Max. continuous input speed	rpm	4000	4000
Ambient temperature	°C	-20...+100	-20...+100
Bearing at output		Ball bearing	Ball bearing

Operating range (output shaft)

Continuous operation
Intermittent operation

A Standard version

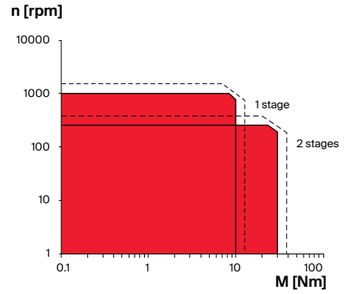

UP Ultra performance

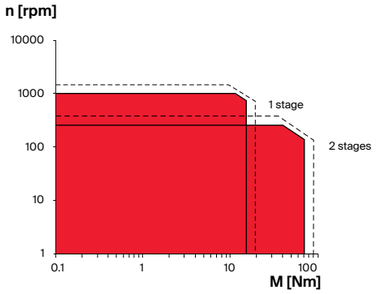

Specifications		A Standard version		UP Ultra performance	
Number of stages		1	2	1	2
Max. transmittable power (continuous)	W	850	600	1200	1050
Max. transmittable power (intermittent)	W	1063	750	1500	1313
Max. continuous torque	Nm	10.0	30.0	15.0	70.0
Max. intermittent torque	Nm	12.5	37.5	18.8	87.5
Max. continuous input speed	rpm	4000	4000	4000	4000
Max. intermittent input speed	rpm	6000	6000	6000	6000
Max. efficiency	%	95	92	95	92
Average backlash no load	°	0.5	0.5	0.5	0.5
Max. axial load (dynamic)	N	825	825	825	825
Max. permissible radial load, 10 mm from flange	N	1000	1200	1000	1200
Gearhead length L1[1]	mm	58.5	80.4	58.5	80.4
Weight	g	993	1399	1001	1425

Configuration	A Standard version		UP Ultra performance	
Number of stages	1	2	1	2
Reduction	3.9, 5.3, 6.6	16, 21, 26, 28, 35, 44	3.9, 5.3, 6.6	16, 21, 26, 28, 35, 44
Version	Standard/noise reduced/ultra performance			
Flange	Standard flange			
Shaft				

Modular system		Page			Page
Servo Motors	№ of stages [opt.]		**BLDC Motors**	№ of stages [opt.]	
IDX 70 S IE	1–2	112	EC-i 70	1–4	209
IDX 70 M IE	1–2	113			
IDX 70 S Safe	1–2	115			
IDX 70 M Safe	1–2	116			
IDX 70 S	1–2	122			
IDX 70 M	1–2	123			

[1]This length may vary depending on the configuration and choice of motor. The effective length is calculated at the end of the configuration process.

© 2026 maxon. All rights reserved. Subject to change.

GPX 70 ∅70 mm, planetary gearhead

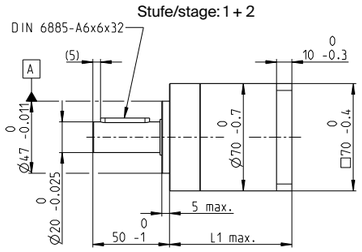

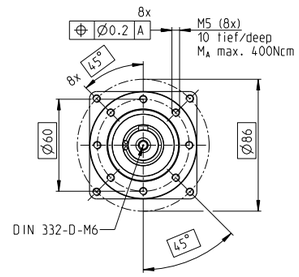

M 1:4

Key data		LN Noise reduced
Max. transmittable power	W	700
Max. continuous torque	Nm	27.0
Max. continuous input speed	rpm	4000
Ambient temperature	°C	-20...+85
Bearing at output		Ball bearing
Typical noise level	dBA	-5 dBA compared to standard configuration

Operating range (output shaft)

Continuous operation
Intermittent operation

LN Noise reduced

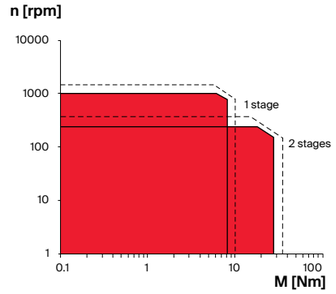

Specifications		LN Noise reduced	
Number of stages		1	2
Max. transmittable power (continuous)	W	700	450
Max. transmittable power (intermittent)	W	875	563
Max. continuous torque	Nm	8.0	27.0
Max. intermittent torque	Nm	10.0	34.0
Max. continuous input speed	rpm	4000	4000
Max. intermittent input speed	rpm	6000	6000
Max. efficiency	%	95	92
Average backlash no load	°	0.5	0.5
Max. axial load (dynamic)	N	825	825
Max. permissible radial load, 10 mm from flange	N	1000	1200
Gearhead length L1[1]	mm	58.5	80.4
Weight	g	924	1330

Configuration	LN Noise reduced	
Number of stages	1	2
Reduction	3.9, 5.3, 6.6	16, 21, 26, 28, 35, 44
Version	Standard/noise reduced/ultra performance	
Flange	Standard flange	
Shaft		

Modular system		Page			Page
Servo Motors	№ of stages [opt.]		**BLDC Motors**	№ of stages [opt.]	
IDX 70 S IE	1–2	112	EC-i 70	1–4	209
IDX 70 M IE	1–2	113			
IDX 70 S Safe	1–2	115			
IDX 70 M Safe	1–2	116			
IDX 70 S	1–2	122			
IDX 70 M	1–2	123			

[1]This length may vary depending on the configuration and choice of motor. The effective length is calculated at the end of the configuration process.

© 2026 maxon. All rights reserved. Subject to change.

GSW 62 A ∅62 mm, strain wave gearhead

Zero backlash

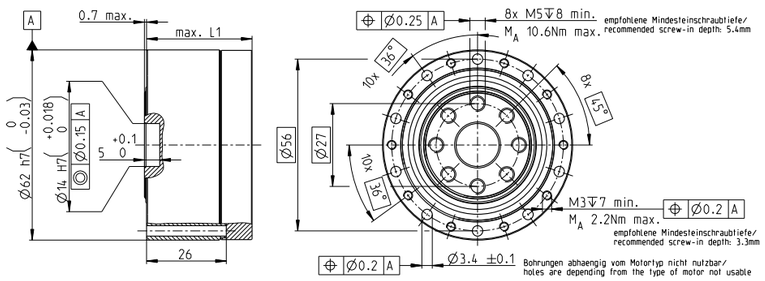

M 5:2

Stock program
Standard program
Special program (on request)

			Part numbers		
			867137	867132	867073
Gearhead data					
1	Reduction		50:1	80:1	100:1
2	Max. continuous torque	Nm	18.0	19.0	27.0
3	Max. intermittent torque	Nm	23.0	29.0	37.0
4	Max. overload torque	Nm	48.0	61.0	71.0
5	Max. continuous input speed	rpm	3500	3500	3500
	Max. intermittent input speed	rpm	7300	7300	7300
6	Max. efficiency	%	72	72	75
7	Weight	g	460	460	460
8	Mass moment of inertia	gcm²	88.0	85.0	85.0
9	Gearhead length L1[1]	mm	32.4	32.4	32.4
10	Mech. positioning accuracy	arcmin	1.5	1.5	1.5
11	Mech. repeatability	arcmin	0.10	0.10	0.10
12	Hysteresis loss	arcmin	2.0	1.5	1.5
13	Torsional rigidity C1	10^4 Nm/rad	0.67	0.84	0.84
	Torsional rigidity C2	10^4 Nm/rad	0.88	0.94	0.94
	Torsional rigidity C3	10^4 Nm/rad	1.20	1.30	1.30
14	Torque M1	Nm	3.9	3.0	3.0
	Torque M2	Nm	12.0	7.0	7.0
15	Starting torque, no load	mNm	50.3	33.0	28.5
16	Backdriving torque, no load	Nm	2.5	2.0	2.3
17	Ratcheting torque	Nm	105	140	110
18	Buckling torque	Nm	330	330	330

Technical data			Modular system
19	Bearing at output	cross roller bearings	**BLDC Motors**
20	Tilting rigidity	17 Nm/arcmin	138_ECX FLAT 42
21	Max. tilting torque	42.0 Nm	207–208_EC-i 52
22	Max. radial load	2030 N	226–227_ECX FLAT 42
23	Max. axial load	4075 N	229–231_EC 60 flat
24	Dynamic load rating	2060 N	
25	Static load rating	2640 N	**Servo Motors**
26	Distance rolling bearing center to output	10 mm	109–111_IDX 56 IE
27	Pitch diameter	42.7 mm	119–121_IDX 56
28	Ambient temperature	-40...+100 °C	

Additional information

Explanation of the line numbers and additional information on page 358.

[1]This length may vary depending on the configuration and choice of motor. The effective length is calculated at the end of the configuration process.

© 2026 maxon. All rights reserved. Subject to change.

GSW 70 A ∅70 mm, strain wave gearheads

Zero backlash

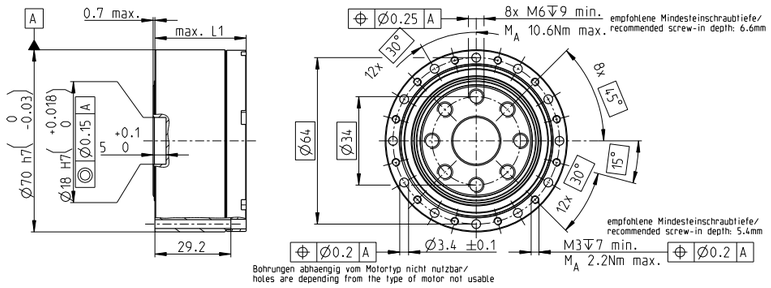

M 5:2

Stock program
Standard program
Special program (on request)

			Part numbers		
			889224	889723	889738
Gearhead data (provisional)					
1	Reduction		50:1	80:1	100:1
2	Max. continuous torque	Nm	24.0	33.0	34.0
3	Max. intermittent torque	Nm	39.0	51.0	57.0
4	Max. overload torque	Nm	69.0	89.0	95.0
5	Max. continuous input speed	rpm	3500	3500	3500
	Max. intermittent input speed	rpm	6500	6500	6500
6	Max. efficiency	%	75	75	75
7	Weight	g	473	473	473
8	Mass moment of inertia	gcm²	153	148	146
9	Gearhead length L1[1]	mm	29.2	29.2	29.2
10	Mech. positioning accuracy	arcmin	1	1	1
11	Mech. repeatability	arcmin	0.15	0.15	0.15
12	Hysteresis loss	arcmin	2	1	1
13	Torsional rigidity C1	10^4 Nm/rad	1.1	1.3	1.3
	Torsional rigidity C2	10^4 Nm/rad	1.3	1.7	1.7
	Torsional rigidity C3	10^4 Nm/rad	2.0	2.5	2.5
14	Torque M1	Nm	7.0	7.0	7.0
	Torque M2	Nm	25.0	25.0	25.0
15	Starting torque, no load	mNm	73.0	48.0	43.0
16	Backdriving torque, no load	Nm	5.2	5.7	6.0
17	Ratcheting torque	Nm	150	245	180
18	Buckling torque	Nm	560	560	560

Technical data			Modular system
19	Bearing at output	cross roller bearings	**BLDC Motors**
20	Tilting rigidity	25.7 Nm/arcmin	207–208_EC-i 52
21	Max. tilting torque	57 Nm	229–231_EC 60 flat
22	Max. radial load	2345 N	232–234_EC 90 flat
23	Max. axial load	4700 N	
24	Dynamic load rating	2110 N	**Servo Motors**
25	Static load rating	2790 N	109–111_IDX 56 IE
26	Distance rolling bearing center to output	10 mm	119–121_IDX 56
27	Pitch diameter	49.7 mm	
28	Ambient temperature	-40...+100 °C	

Additional information

Explanation of the line numbers and additional information on page 358.

[1]This length may vary depending on the configuration and choice of motor. The effective length is calculated at the end of the configuration process.

© 2026 maxon. All rights reserved. Subject to change.

GB 65 Worm Gear

Steel/Bronze Version

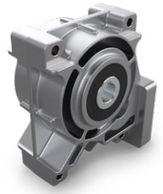

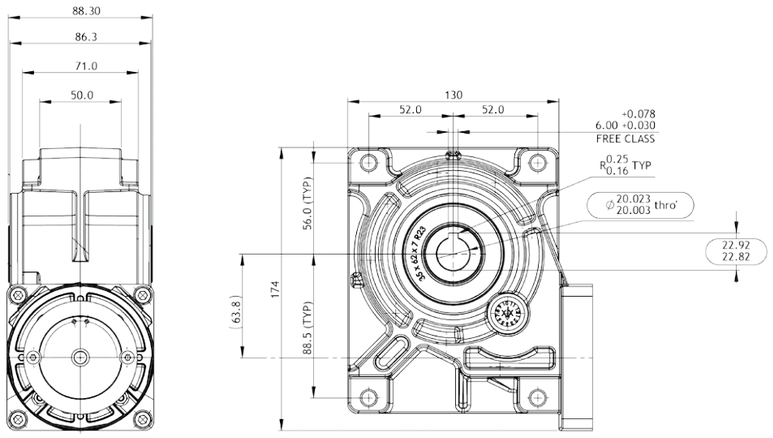

Key data		Steel/bronze version
Max. continuous torque	Nm	120
Ambient temperature	°C	-30...+120
Max. continuous input speed	rpm	4000
Gearhead length[1]	mm	130
Bearing at output		Ball bearing
Weight	kg	3.5

Specifications		Steel/bronze version		
Part numbers (special program on request)		848390	848392	848393
Reduction	X:1	80	120	160
Number of stages		2	2	2
Max. continuous torque	Nm	120	120	120
Max. intermittent torque	Nm	300	300	300
Max. continuous input speed	rpm	4000	4000	4000
Max. intermittent input speed	rpm	5000	5000	5000
Max. efficiency	%	70	60	55
Average backlash no load	arcmin	35	35	35
Max. axial load (dynamic)	N	1000	1000	1000
Max. permissible radial load, 12 mm from flange	N	3000	3000	3000

Configuration	Steel/bronze version
Gearhead position to motor	4 positions, all at 90°

Modular system	
BLDC Motors	Page
EC-i 70	209
EC 90 flat	232–237
Servomoteurs	
IDX 70 IE	112–113
IDX 70	122–123

Notes

[1]Length given excludes intermediate plate for motor combination

© 2026 maxon. All rights reserved. Subject to change.

GB 9 Worm Gear

Composite Version

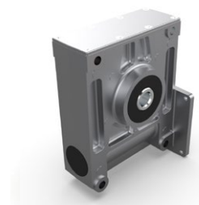

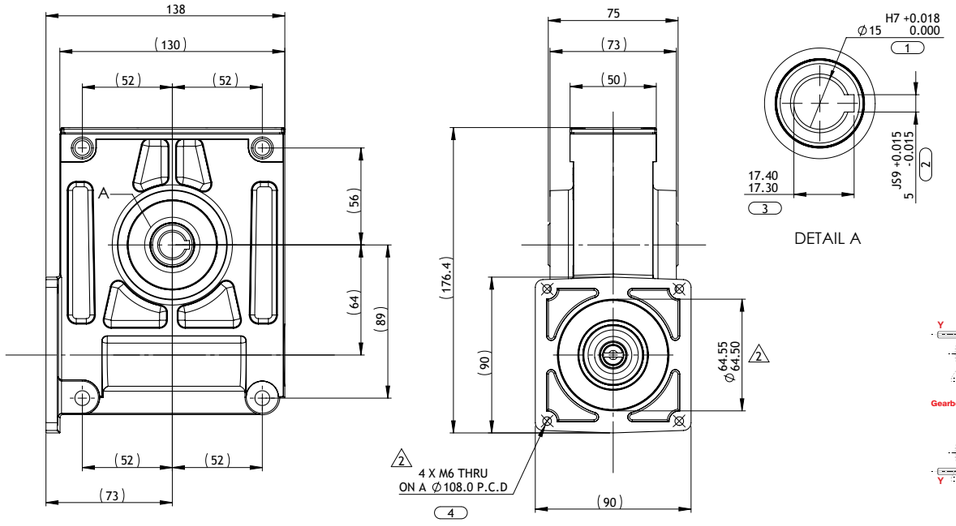

Key data		Composite version
Max. continuous torque	Nm	50
Ambient temperature	°C	-30...+130
Max. continuous input speed	rpm	4000
Gearhead length[1]	mm	138
Bearing at output		Ball bearing
Weight	kg	2.3

Specifications		Composite version		
Part numbers (special program on request)		735894	735895	735896
Reduction	X:1	15	30	60
Number of stages		1	1	1
Max. continuous torque	Nm	50	50	50
Max. intermittent torque	Nm	80	80	80
Max. continuous input speed	rpm	4000	4000	4000
Max. intermittent input speed	rpm	5000	5000	5000
Max. efficiency	%	85	75	65
Average backlash no load	arcmin	10–25	10–25	10–25
Max. axial load (dynamic)	N	600	600	600
Max. permissible radial load, 12 mm from flange	N	800	800	800

Configuration	Composite version
Gearhead position to motor	4 positions, all at 90°

Modular system	
BLDC Motors	Page
EC-i 70	209
EC 90 flat	232–237
Servo Motors	
IDX 70 IE	112–113
IDX 70	122–123

Notes

[1]Length given excludes intermediate plate for motor combination
Standard shaft ∅25, length 50 mm with 8 mm keyway 735898

© 2026 maxon. All rights reserved. Subject to change.

ENX 42 MILE Encoder ∅42 mm, 2048 CPT

Integrated into motor

Key data		ENX 42 MILE incremental
Number of channels		2
Max. counts per turn		2048
Encoder length L	mm	1.1
Ambient temperature	°C	-40...+100
Weight	g	8

Selection criteria	ENX 42 MILE incremental
Speed and rotation direction detection	■
Speed and position control	■
Compact and robust design	■
High resolution	■
Cost effective	■

■ suitable ▲ suitable to a limited extent ● not suitable

Specifications		ENX 42 MILE incremental
Supply voltage V_{cc}	V	5V ±10%
Typical current draw	mA	15
Max. operating frequency	kHz	1000
Max. speed	rpm	10 000
Connector		10-pin 2.54 mm multipoint connector (IEC/EN 60603-13 / DIN41651)

Pin 1 Not connected
Pin 2 V_{CC}
Pin 3 GND
Pin 4 Not connected
Pin 5 Channel $\overline{A}$
Pin 6 Channel A
Pin 7 Channel $\overline{B}$
Pin 8 Channel B
Pin 9 Not connected
Pin 10 Not connected

Modular system	Page
BLDC Motors	
ECX FLAT 42 S	223
ECX FLAT 42 S High Torque	224
ECX FLAT 42 M High Torque	226

Dimensions standard version M 1:2

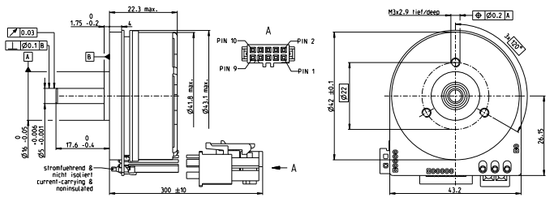

© 2026 maxon. All rights reserved. Subject to change.

ENX 22 EASY INT Encoder ∅22 mm, 1024 CPT / 4096 steps, Single Turn

Integrated into motor

Key data		EASY incremental and absolute
Number of channels		3
Counts per turn		1024
Steps per turn		4096
Resolution (bit single turn)		12
Encoder length L	mm	0 (integrated into motor)
Ambient temperature	°C	-40...+125

Selection criteria	EASY incremental and absolute
Speed and rotation direction detection	■
Speed and position control	■
Compact and robust design	■
High resolution	■
Cost effective	■

■ suitable ▲ suitable to a limited extent ● not suitable

Specifications		EASY incremental and absolute
Supply voltage V_{cc}	V	5 ±0.5
Typical current draw	mA	22
Max. operating frequency	kHz	4000
Max. speed	rpm	200 000
Connector[1] M12, male, A-coded		

Pin 1 GND (ground)
Pin 2 Motor NTC
Pin 3 $+V_{CC}$
Pin 4 Channel A
Pin 5 Channel $\overline{I}$
Pin 6 Channel $\overline{A}$
Pin 7 Channel $\overline{B}$
Pin 8 Channel I
Pin 9 Motor NTC
Pin 10 Channel B
Pin 11 Data_out-
Pin 12 Data_out
Pin 13 CLK_in
Pin 14 CLK_in-
Pin 15 Hall 3
Pin 16 Hall 1
Pin 17 Hall 2

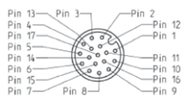

Output signal: EIA-Standard RS 422
Output current per channel: ± 20 mA

Configuration	EASY incremental and absolute
Signal protocol	BiSS-C, SSI

Modular system	Page
Servo Motors	
IDX 56	119–121
IDX 70	122–124

Notes

[1]Connecting cables available in Online Configurator.

Further technical details can be found in the product information in the online shop under Downloads.

© 2026 maxon. All rights reserved. Subject to change.

TSX 50 MAG Encoder, 2560 CPT

Integrated into the motor EC frameless DT

Key data		TSX 50 MAG incremental, commutation signal
Number of channels		2
Max. counts per turn		2560
Encoder length L (axial)	mm	8.55
Encoder length L (radial)	mm	7.65
Ambient temperature	°C	-40...+105
Weight	g	19

Selection criteria	TSX 50 MAG incremental, commutation signal
Speed and rotation direction detection	■
Speed and position control	■
Compact and robust design	■
High resolution	▲
Cost effective	■

■ suitable ▲ suitable to a limited extent ● not suitable

Specifications		TSX 50 MAG with a axial cable outlet	TSX 50 MAG with a radial cable outlet
Supply voltage V_{CC}	V	5V ±0.5	5V ±0.5
Typical current draw	mA	18	18
Max. operating frequency	kHz	500	500
Max. electrical speed	rpm	10 000	10 000
Axial connector manufacturer	Molex	Pin 1 NTC-	Pin 1 V_{CC}
Axial connector	part no. 501331-1407	Pin 2 NTC+	Pin 2 GND
Radial connector manufacturer	JST	Pin 3 N.C.	Pin 3 $\overline{A}$*
Radial connector	part no. SM14B-NSHSS-TB	Pin 4 H3	Pin 4 A*
		Pin 5 H2	Pin 5 $\overline{B}$*
		Pin 6 H1	Pin 6 B*
		Pin 7 Not connect	Pin 7 Not connect
		Pin 8 Not connect	Pin 8 Not connect
		Pin 9 B*	Pin 9 H1
		Pin 10 $\overline{B}$*	Pin 10 H2
		Pin 11 A*	Pin 11 H3
		Pin 12 $\overline{A}$*	Pin 12 N.C.
		Pin 13 GND	Pin 13 NTC+
		Pin 14 V_{CC}	Pin 14 NTC-
		*Output signal: EIA-Standard RS 422/Output current per channel: ±20 mA	
Additional 300 mm adapter cable for		EPOS4: 708583 EPOS4 Disk: 865360 ESCON: 708584	EPOS4: 708586 EPOS4 Disk: 865359 ESCON: 708587

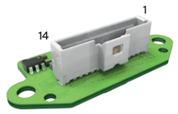

Variants	TSX 50 MAG with a axial cable outlet	TSX 50 MAG with a radial cable outlet
Part number	732076	723837

Modular system	Page
Frameless BLDC Motors	
DT 50 S	245
DT 50 M	247

Dimensions of standard configuration 1:2

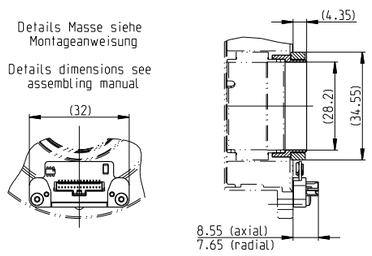

Notice

H1 is calibrated to commutation angle zero, in accordance with page 73.
Rotor and stator are paired by maxon.
Mechanical dimensions available in the EC frameless DT assembly instruction.

For your personal notes

© 2026 maxon. All rights reserved. Subject to change.

ESCON2 Data

CANopen I/O

USB SCI GUI

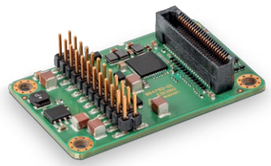

ESCON2 Module 60/12

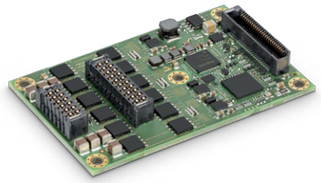

ESCON2 Module 60/30

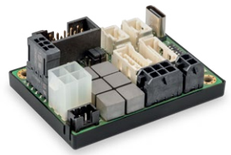

ESCON2 Compact 60/2

ESCON2 Compact 60/5

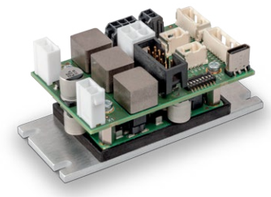

ESCON2 Compact 60/12

Controller version					
	Commands via I/O or CANopen Slave	**Commands via I/O or CANopen Slave**	**Commands via I/O or CANopen Slave**	**Commands via I/O or CANopen Slave**	**Commands via I/O or CANopen Slave**
Electrical data					
Operating voltage V_{cc}	10 - 60 VDC	10 - 60 VDC	10 - 60 VDC	10 - 60 VDC	10 - 60 VDC
Logic supply voltage V_c (optional)	10 - 60 VDC	10 - 60 VDC	10 - 60 VDC	10 - 60 VDC	10 - 60 VDC
Max. output voltage	0.90×V_{cc}	0.95×V_{cc}	0.90×V_{cc}	0.90×V_{cc}	0.90×V_{cc}
Max. output current I_{max}	24 A (<5 s)	60 A (<4 s)	6 A (<2 s)	15 A (<5 s)	24 A (<5 s)
Continuous output current I_{cont}	12 A	30 A	2 A	5 A	12 A
Switching frequency of power stage	100 kHz	50 kHz	100 kHz	100 kHz	100 kHz
Sampling rate of PI current controller	50 kHz (20 µs)	50 kHz (20 µs)	50 kHz (20 µs)	50 kHz (20 µs)	50 kHz (20 µs)
Sampling rate of PI speed controller	10 kHz (100 µs)	10 kHz (100 µs)	10 kHz (100 µs)	10 kHz (100 µs)	10 kHz (100 µs)
Max. speed (1 pole pair)	120 000 rpm (sinusoidal)	120 000 rpm (sinusoidal)	120 000 rpm (sinusoidal)	120 000 rpm (sinusoidal)	120 000 rpm (sinusoidal)
Built-in motor choke per phase	–	–	44 µH / 5 A	13.6 µH / 9 A	4.7 µH / 12 A
Inputs					
Hall sensor signals	H1, H2, H3	H1, H2, H3	H1, H2, H3	H1, H2, H3	H1, H2, H3
Encoder signals	A, A\, B, B\ (max. 6.67 MHz)	A, A\, B, B\ (max. 6.67 MHz)	A, A\, B, B\ (max. 6.67 MHz)	A, A\, B, B\ (max. 6.67 MHz)	A, A\, B, B\ (max. 6.67 MHz)
Sensor signals	Clock, Data	Clock, Data	Clock, Data	Clock, Data	Clock, Data
Digital inputs	4	4	4	4	4
Digital inputs “High-speed”	4	4	4	4	4
Analog inputs	2 (12-bit resolution, -10...+10 V)	2 (12-bit resolution, -10...+10 V)	2 (12-bit resolution, -10...+10 V)	2 (12-bit resolution, -10...+10 V)	2 (12-bit resolution, -10...+10 V)
CAN ID	configurable with external wiring	configurable with external wiring	configurable with DIP switch 1...5	configurable with DIP switch 1...5	configurable with DIP switch 1...5
Outputs					
Digital outputs	2	2	2	2	2
Digital outputs “High-speed”	1	1	1	1	1
Analog outputs	2 (12-bit resolution, -4...+4 V, max. 1 mA)	2 (12-bit resolution, -4...+4 V, max. 1 mA)	2 (12-bit resolution, -4...+4 V, max. 1 mA)	2 (12-bit resolution, -4...+4 V, max. 1 mA)	2 (12-bit resolution, -4...+4 V, max. 1 mA)
Encoder voltage output Hall sensor voltage output	5 VDC, max. 145 mA	5 VDC, max. 145 mA	5 VDC, max. 145 mA	5 VDC, max. 145 mA	5 VDC, max. 145 mA
Auxiliary voltage output	3.3 VDC, max. 20 mA	3.3 VDC, max. 20 mA	–	–	–
Communication interfaces					
CAN	yes	yes	yes	yes	yes
SCI (RS232 ext. transceiver)	yes	yes	–	–	–
USB	yes	yes	yes	yes	yes
Indicator					
LED green = READY, red = ERROR	External LEDs required	External LEDs required	yes	yes	yes
Environmental conditions					
Temperatrue – Operation	-30...+50 °C	-30...+25 °C	-30...+60 °C	-30...+35 °C	-30...+50 °C
Temperature – Extended Range	50...80 °C; Derating: -0.4 A/°C	25...75 °C; Derating: -0.506 A/°C	60...65 °C; Derating: -0.235 A/°C	35...65 °C; Derating: -0.164 A/°C	50...80 °C; Derating: -0.4 A/°C
Temperature – Storage	-40...+85 °C	-40...+85 °C	-40...+85 °C	-40...+85 °C	-40...+85 °C
Humidity (condensation not permitted)	5...90%	5...90%	5...90%	5...90%	5...90%
Mechanical data					
Weight	approx. 12 g	approx. 19 g	approx. 32 g	approx. 32 g	approx. 90 g
Dimensions (L×W×H)	49.5×31×12.4 mm	67.0×43.0×7.8 mm	55×40×22.8 mm	55×40×22.8 mm	81×41×33.5 mm
Mounting	Pluggable and M2.5 screws	Pluggable and M2.5 screws	M2.5 screws	M2.5 screws	M3 screws
Part numbers					
	854796 ESCON2 Module 60/12	**783722** ESCON2 Module 60/30	**903540** ESCON2 Compact 60/2	**903533** ESCON2 Compact 60/5	**854801** ESCON2 Compact 60/12
Accessories					
	235811 DSR 70/30 Shunt regulator	**235811** DSR 70/30 Shunt regulator	**235811** DSR 70/30 Shunt regulator	**235811** DSR 70/30 Shunt regulator	**235811** DSR 70/30 Shunt regulator
	Order accessories separately, see page 445	Order accessories separately, see page 445	Order accessories separately, see page 445	Order accessories separately, see page 445	Order accessories separately, see page 445

© 2026 maxon. All rights reserved. Subject to change.

© 2026 maxon. All rights reserved. Subject to change.

EtherCAT CANopen

USB RS232 GUI

	EPOS4 Compact 50/15 CAN Ready-to-install compact solution, designed for use with brushed DC motors with encoders or brushless EC motors with Hall sensors and encoders up to 750/1500 Watt.	EPOS4 Compact 50/15 EtherCAT Ready-to-install compact solution, designed for use with brushed DC motors with encoders or brushless EC motors with Hall sensors and encoders up to 750/1500 Watt.
Controller version		
	CANopen Slave	**EtherCAT Slave**
Electrical data		
Operating voltage V_{cc}	10 - 50 VDC	10 - 50 VDC
Logic supply voltage V_c (optional)	10 - 50 VDC	10 - 50 VDC
Max. output voltage	$0.9 \times V_{cc}$	$0.9 \times V_{cc}$
Max. output current I_{max}	30 A (<60 s)	30 A (<60 s)
Continuous output current I_{cont}	15 A	15 A
Switching frequency of power stage	50 kHz	50 kHz
Sampling rate of PI current controller	25 kHz (40 µs)	25 kHz (40 µs)
Sampling rate of PI speed controller	2.5 kHz (400 µs)	2.5 kHz (400 µs)
Sampling rate of PID position controller	2.5 kHz (400 µs)	2.5 kHz (400 µs)
Max. speed (1 pole pair)	50 000 rpm (sinusoidal), 100 000 rpm (block)	50 000 rpm (sinusoidal), 100 000 rpm (block)
Built-in motor choke per phase	2.2 µH / 15 A	2.2 µH / 15 A
Inputs		
Hall sensor signals	H1, H2, H3	H1, H2, H3
Encoder signals	A, A\, B, B\, I, I\ (max. 6.25 MHz)	A, A\, B, B\, I, I\ (max. 6.25 MHz)
Sensor signals	A, A\, B, B\, I, I\, Clock, Clock\, Data, Data\	A, A\, B, B\, I, I\, Clock, Clock\, Data, Data\
Digital inputs	4 (level switchable: logic/PLC)	4 (level switchable: logic/PLC)
Digital inputs “High-speed”	4, differential	4, differential
Analog inputs	2 (12-bit resolution, -10...+10 V)	2 (12-bit resolution, -10...+10 V)
CAN ID / DEV ID	configurable with DIP switch 1...5	configurable with DIP switch 1...5
Outputs		
Digital outputs	2	2
Digital outputs “High-speed”	1, differential	1, differential
Analog outputs	2 (12-bit resolution, -4...+4 V, max. 1 mA)	2 (12-bit resolution, -4...+4 V, max. 1 mA)
Encoder voltage output	5 VDC, max. 70 mA	5 VDC, max. 70 mA
Hall sensor voltage output	5 VDC, max. 30 mA	5 VDC, max. 30 mA
Auxiliary voltage output	5 VDC, max. 145 mA	5 VDC, max. 145 mA
Communication interfaces		
CAN	high; low (max. 1 Mbit/s)	–
EtherCAT	–	100 Mbit/s (Full Duplex)
RS232	RxD; TxD (max. 115 200 bit/s)	–
USB 2.0/3.0	Data+; Data- (Full Speed)	Data+; Data- (Full Speed)
Indicator		
LED green = READY, red= ERROR	Green LED, red LED	Green LED, red LED
Environmental conditions		
Temperature – Operation	-30...+25 °C	-30...+25 °C
Temperature – Extended Range	25...77 °C; Derating: -0.288 A/°C	25...77 °C; Derating: -0.288 A/°C
Temperature – Storage	-40...+85 °C	-40...+85 °C
Humidity (condensation not permitted)	5...90%	5...90%
Mechanical data		
Weight	approx. 126 g	approx. 140 g
Dimensions (L×W×H)	59.5×65.5×35.1 mm	59.5×79.5×37.8 mm
Mounting	M3 screws	M3 screws
Part numbers		
	520886 EPOS4 Compact 50/15 CAN	605299 EPOS4 Compact 50/15 EtherCAT
Accessories		
	235811 DSR 70/30 Shunt regulator Order accessories separately, see page 453	235811 DSR 70/30 Shunt regulator Order accessories separately, see page 453

© 2026 maxon. All rights reserved. Subject to change.

EPOS4 Positioning Controllers Data

	EPOS4 Compact 60/20 CAN Ready-to-install compact solution, designed for use with brushed DC motors with encoders or brushless EC motors with Hall sensors and encoders up to 1200/2400 Watt.	EPOS4 Compact 60/20 CAN Ready-to-install compact solution, designed for use with brushed DC motors with encoders or brushless EC motors with Hall sensors and encoders up to 1200/2400 Watt.	EPOS4 50/5 Positioning controller in a robust housing, designed for use with brushed DC motors with encoders or brushless EC motors with Hall sensors and encoders up to 250/750 Watt.
Controller version			
	CANopen Slave	**CANopen Slave**	**CANopen Slave with EtherCAT option**
Electrical data			
Operating voltage V_{cc}	10 - 60 VDC	10 - 60 VDC	10 - 50 VDC
Logic supply voltage V_c (optional)	10 - 60 VDC	10 - 60 VDC	10 - 50 VDC
Max. output voltage	$0.9 \times V_{cc}$	$0.9 \times V_{cc}$	$0.9 \times V_{cc}$
Max. output current I_{max}	40 A (<15 s)	40 A (<15 s)	15 A (<15 s)
Continuous output current I_{cont}	20 A	20 A	5 A
Switching frequency of power stage	50 kHz	50 kHz	50 kHz
Sampling rate of PI current controller	25 kHz (40 µs)	25 kHz (40 µs)	25 kHz (40 µs)
Sampling rate of PI speed controller	2.5 kHz (400 µs)	2.5 kHz (400 µs)	2.5 kHz (400 µs)
Sampling rate of PID position controller	2.5 kHz (400 µs)	2.5 kHz (400 µs)	2.5 kHz (400 µs)
Max. speed (1 pole pair)	50 000 rpm (sinusoidal), 100 000 rpm (block)	50 000 rpm (sinusoidal), 100 000 rpm (block)	50 000 rpm (sinusoidal), 100 000 rpm (block)
Built-in motor choke per phase	1 µH / 20 A	1 µH / 20 A	15 µH / 5 A
Inputs			
Hall sensor signals	H1, H2, H3	H1, H2, H3	H1, H2, H3
Encoder signals	A, A\, B, B\, I, I\ (max. 6.25 MHz)	A, A\, B, B\, I, I\ (max. 6.25 MHz)	A, A\, B, B\, I, I\ (max. 6.25 MHz)
Sensor signals	A, A\, B, B\, I, I\, Clock, Clock\, Data, Data\	A, A\, B, B\, I, I\, Clock, Clock\, Data, Data\	A, A\, B, B\, I, I\, Clock, Clock\, Data, Data\
Digital inputs	4 (level switchable: logic/PLC)	4 (level switchable: logic/PLC)	4 (level switchable: logic/PLC)
Digital inputs “High-speed”	4, differential	4, differential	4, differential
Analog inputs	2 (12-bit resolution, -10...+10 V)	2 (12-bit resolution, -10...+10 V)	2 (12-bit resolution, -10...+10 V)
CAN ID / DEV ID	configurable with DIP switch 1...5	configurable with DIP switch 1...5	configurable with DIP switch 1...5
Outputs			
Digital outputs	2	2	2
Digital outputs “High-speed”	1, differential	1, differential	1, differential
Analog outputs	2 (12-bit resolution, -4...+4 V, max. 1 mA)	2 (12-bit resolution, -4...+4 V, max. 1 mA)	2 (12-bit resolution, -4...+4 V, max. 1 mA)
Encoder voltage output	5 VDC, max. 70 mA	5 VDC, max. 70 mA	5 VDC, max. 70 mA
Hall sensor voltage output	5 VDC, max. 30 mA	5 VDC, max. 30 mA	5 VDC, max. 30 mA
Auxiliary voltage output	5 VDC, max. 145 mA	5 VDC, max. 145 mA	5 VDC, max. 145 mA
Communication interfaces			
CAN	high; low (max. 1 Mbit/s)	high; low (max. 1 Mbit/s)	high; low (max. 1 Mbit/s)
EtherCAT	–	–	Optional 581245 EPOS4 EtherCAT Card available
RS232	RxD; TxD (max. 115 200 bit/s)	RxD; TxD (max. 115 200 bit/s)	RxD; TxD (max. 115 200 bit/s)
USB 2.0/3.0	Data+; Data- (Full Speed)	Data+; Data- (Full Speed)	Data+; Data- (Full Speed)
Indicator			
LED green = READY, red= ERROR	Green LED, red LED	Green LED, red LED	Green LED, red LED
Environmental conditions			
Temperature – Operation	-30...+25 °C	-30...+25 °C	-30...+50 °C
Temperature – Extended Range	25...77 °C; Derating: -0.288 A/°C	25...77 °C; Derating: -0.288 A/°C	50...80 °C; Derating: -0.167 A/°C
Temperature – Storage	-40...+85 °C	-40...+85 °C	-40...+85 °C
Humidity (condensation not permitted)	5...90%	5...90%	5...90%
Mechanical data			
Weight	approx. 171 g	approx. 171 g	approx. 206 g
Dimensions (L×W×H)	80×69×35 mm	80×69×35 mm	105.0×83.0×38.7 mm
Mounting	M3 screws	M3 screws	Flange for M4-screws
Part numbers			
	894250 EPOS4 Compact 60/20 CAN	833726 EPOS4 Compact 60/20 CAN STO	546047 EPOS4 50/5
Accessories			
	235811 DSR 70/30 Shunt regulator Order accessories separately, see page 453	235811 DSR 70/30 Shunt regulator Order accessories separately, see page 453	309687 DSR 50/5 Shunt regulator Order accessories separately, see page 453

© 2026 maxon. All rights reserved. Subject to change.

MiniMACS6-AMP-4/50/10-IF1 Data
Programmable Motion Controller

MiniMACS6-AMP-4/50/10 OEM
Freely programmable, compact multi-axis motion controller with integrated high-performance power stages, without housing.

MiniMACS6-AMP-4/50/10
Freely programmable, compact multi-axis motion controller with integrated high-performance power stages.

MiniMACS6-AMP-4/50/10-IF1
Freely programmable, compact multi-axis motion controller with integrated high-performance power stages and a network option card (Ethernet/EtherCAT/PROFINET in planning).

Controller versions	
	CANopen Master/Slave, EtherCAT Slave optional, Ethernet optional, Standalone with APOSS® win
Features	
Motion features	Trapezoidal, jerk limited, CAM, synchronous travel, path, kinematics
Profile generator cycle	1 kHz (1 ms)
Sampling rate of PID positioning controller with speed and acceleration feed-forward control	1 kHz (1 ms)
Maximum number of axes	6
Web server (visualization)	optional
Expandable memory	yes (datalogging on USB stick)
Electrical data	
Logic supply voltage V_C	18 - 30 VDC
Inputs	
Digital inputs	16 (PLC level, 4 latch capable)
Analog inputs	2 (12-bit resolution, 0...10 V)
Hall sensor signals	4 x (H1, H2, H3)
CAN-ID (CAN node identification)	configurable with DIP switch
Output	
Digital output	8 (max. 100 mA per output)
Analog output	–
Encoder voltage output	5 VDC, max. 200 mA per output, total 1 A
Interfaces	
PROFINET	PROFINET
CAN	2 (max. 1 Mbit/s)
RS232 / RS485	–
EtherCAT-Slave	1
Ethernet	1
USB 2.0	1 Data+; Data- (High Speed)
Encoder inputs	4
Digital incremental	4 (differential, max. 6.25 MHz)
SSI absolute	4 (39 kHz...5 MHz)
Analog incremental (sin/cos)	4 (differential, max. 150 kHz)
Hiperface/EnDat	–
Encoder outputs	
Encoder TTL outputs	–
Indicator	
LEDs	3 (status) / EtherCAT
Display	–
Environmental conditions	
Temperature – Operation	-30...+70 °C
Temperature – Storage	-30...+85 °C
Humidity (condensation not permitted)	5...90%
Mechanical data	
Weight	ca. 600 g
Dimensions (L x W x H)	141 x 110 x 34 mm
Mounting	Metal compact housing / OEM without housing
Ordering Information: Please contact your maxon sales engineer	

Amplifier
Operating voltage V_{CC}: 12 - 60 VDC
6 DC / 4 EC (BLDC) / 3 stepper motors / Twin Mode / Chopper
Max. output voltage: 0.9 x V_{CC}
Max. output current (per axis) I_{cont}: 10 A I_{max}: 30 A
Switching frequency of power stage: 48 kHz
Sampling rate of PI current controller: 24 kHz (41 µs)
Sampling rate of PI speed controller: 8 kHz (125 µs)
Sampling rate of PID positioning controller: 1 kHz (1 ms)

Product variants
Order no. 001755 MiniMACS6-AMP-4/50/10
Order no. 001756 MiniMACS6-AMP-4/50/10 OEM
Order no. 001757 MiniMACS6-AMP-4/50/10-IF1 EtherCAT
Order no. 001784 MiniMACS6-AMP-4/50/10-IF1 Ethernet
Order no. 001824 **NEW** MiniMACS6-AMP-4/50/4-IF1 Ethernet
Order no. 001825 **NEW** MiniMACS6-AMP-4/50/4-IF1 EtherCAT
Order no. 001826 **NEW** MiniMACS6-AMP-4/50/4-IF1 PROFINET
Order no. 001827 **NEW** MiniMACS6-AMP-4/50/10-IF1 PROFINET

© 2026 maxon. All rights reserved. Subject to change.

For your personal notes

© 2026 maxon. All rights reserved.

Level 2
Sub-systems

Subsystems are lower-complexity solutions that combine standard components with application-specific firmware.

IDX

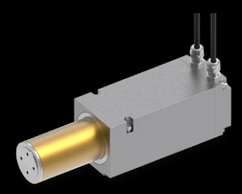

Lift mechanism

MW – Wheel Drive

MW – IDX Wheel Drive

IDX	54
Lift mechanism	55
MW – Wheel Drive	56–57
MW – IDX Wheel Drive	58

The page numbers referenced in the following data sheets correspond to the **maxon Product Program 2026/27.**

© 2026 maxon. All rights reserved.
© 2026 maxon. All rights reserved.

IDX 70 M □70 mm, with integrated electronics

IP65 Drive with positioning/Speed Controller

Key data: 650/773 W, 2441 mNm, 4000 rpm

EtherCAT CANopen I/O

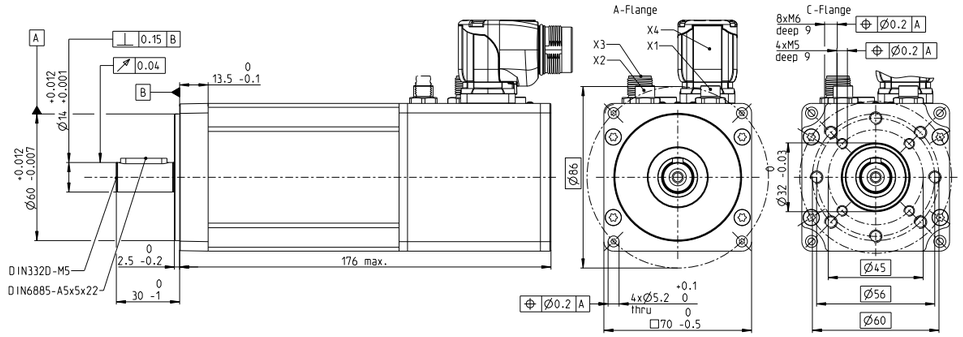

M 1:3

	Drive data (provisional)			
1_	Nominal power supply voltage	V	48	60
2_	Nominal speed	rpm	3038	3022
3_	Nominal torque at 25°C	mNm	2096	2441
4_	Nominal torque at 40°C	mNm	1820	2120
5_	Nominal supply current at 25°C	A	15.3	14.0
6_	Nominal supply current at 40°C	A	13.3	12.2
7_	Maximum speed at nominal voltage	rpm	3150	3195
8_	Maximum permissible drive speed	rpm	4000	3195
9_	Maximum torque (short-time)	mNm	5750	7084
10_	Maximum supply current (short-time)	A	46	46
11_	Rotor inertia of the drive	gcm^2	1050	1050
12_	Nominal supply voltage + V_{CC}	V	12...60	12...60
13_	Mechanical time constant	ms	0.487	0.437

	Thermal data		
14_	Thermal resistance housing-ambient	K/W	1.41
15_	Thermal resistance winding-housing	K/W	0.642
16_	Thermal time constant winding	s	9.83
17_	Thermal time constant drive	s	1260
18_	Ambient temperature	°C	-30...+85

	Mechanical data		
19_	Axial play	mm	0.22
	Preload	N	28
	Direction of force		Pull
20_	Radial play		preloaded
21_	Max. axial load (dynamic)	N	22
22_	Max. force for press fits (static)	N	270
23_	Max. radial load [mm from flange]	N	300 [15]

	Other specifications		
24_	Weight of the drive	g	2500
25_	Typical noise level [rpm]	dBA	60 [3000]
	Protection class without shaft		IP65

Sensor

ENC single-turn absolute encoder:	
Resolution, bits	12
EMT multi-turn absolute encoder:	
Additional length, mm	+39
Resolution, bits	14
Multi-turn: max. no. of turns	65 536

Supply	M23, male, 6 poles, N-coded
I/O's	M12, male, 12 poles, A-coded
CANopen Input	M8, male, 5 poles, B-coded
CANopen Output	M8, female, 5 poles, B-coded
EtherCAT Input	M8, female, 4 poles, A-coded
EtherCAT Output	M8, female, 4 poles, A-coded

Compatible cables available online in the configurator.

Operating range

n [rpm] 48-V-system

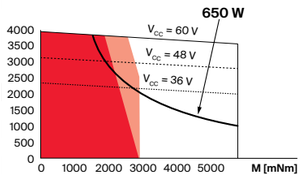

n [rpm] 60-V-system

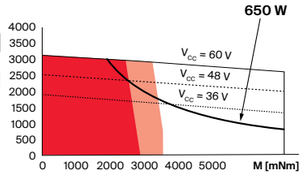

- Continuous operation
- Continuous operation with reduced thermal resistance R_{th2} 50%
- Short term operation

Modular system Details on catalog page 48

Gearheads	Stages [opt.]	Sensors	Control Electronics
371_GPX 70 A/UP	1–2	integrated ENC	integrated
372_GPX 70 LN	1–2	integrated EMT	
399_GB 12	1		
400_GB 9	1	**Accessories**	
401_GB 65	2	481_Brake AB 60 S	

Configuration

Flange front: A-flange / C-flange
Interface with positioning / speed controller: CANopen / EtherCAT
Interface with speed controller: I/O
Angle power connector: 0° / 90°
Shaft: standard with feather key/small diameter without feather key

© 2026 maxon. All rights reserved. Subject to change.

Lift mechanism

Linearactuator for heavy load lifitng

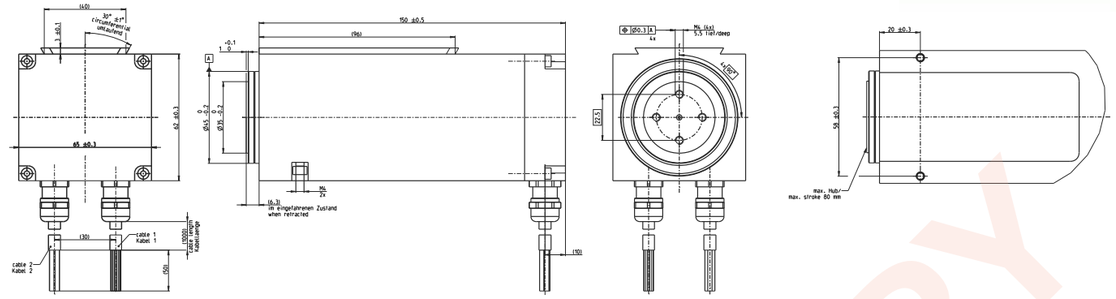

M 1:3

	Drive data	
Lifting force max.	N	3000
Lifting stroke max.	mm	80
Lifting speed max.	mm/s	12
No load speed	mm/s	14
Nominal voltage	V	24
Nominal current	A	7.34
Spindle		trapezodial lead screw
Self-locking		
Force direction		push
Connection		Dovetail
Specifications		
Weight of the drive	g	2850
Ambient temperature	°C	0...+50°C
Protection class		IP40
Controller		external (integrated on request)

Cable allocation cable 1 (Cable AWG 26)

Pin 1	black	Hall sensor 1
Pin 2	brown	Hall sensor 2
Pin 3	red	Hall sensor 3
Pin 4	orange	GND
Pin 5	yellow	V_{Hall} 2.7...24 VDC
Pin 6	green	V_{cc} Encoder
Pin 7	blue	GND
Pin 8	violet	Channel $\overline{A}$
Pin 9	grey	Channel A
Pin 10	white	Channel $\overline{B}$
Pin 11	white-black	Channel B
Pin 12	white-brown	Not connected

Cable allocation cable 2 (Cable AWG 18)

Pin 1	black	Motor winding 1
Pin 2	brown	Motor winding 2
Pin 3	red	Motor winding 3

Preliminary data. This product is currently only available upon request.

PRELIMINARY

© 2026 maxon. All rights reserved. Subject to change.

MW 250 Wheel Drive
48 V | 250 kg payload

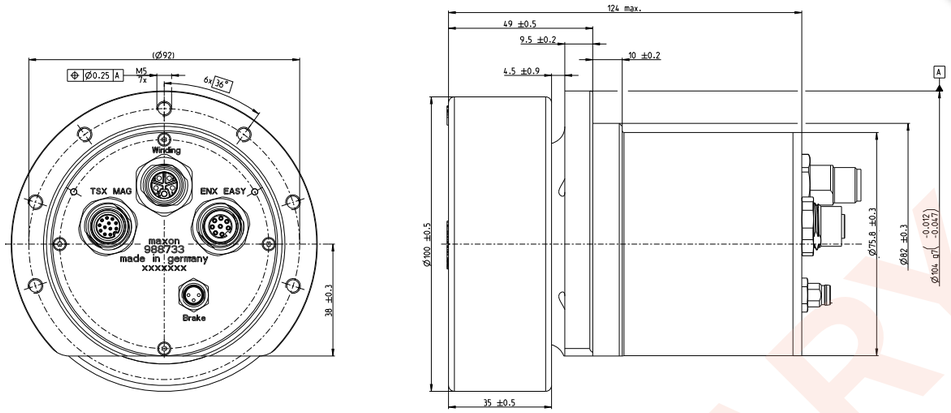

M 1:2

Drive data				
Gear ratio	X:1	15.6	35	-
Nominal supply voltage	VDC	48	48	-
Nominal output speed	rpm	235	110	At nominal operating point
Maximum output speed	rpm	300	133	No-load output speed at 48 V
Nominal output torque (max. continous torque)	Nm	7	16	At nominal operating point
Peak output torque	Nm	17.5	40	Short-term operating range max. 3 s
Nominal output power	W	172	184	At nominal operating point
Peak output power	W	345	369	Short-term operating range max. 3 s
Peak duty cycle	%	5	5	Maximum cumulative peak operating time
Holding brake				
Braking torque at output	Nm	15	30	

Specifications		
Type of protection	IP	54
Operating temperature	°C	0... +50°C
Max. radial load	kg	250

Other specifications		
Wheel		
Wheel Diameter	mm	100, 120
Connector		
Power		M12, male, 4 poles, L-coded
TSX MAG Encoder		M12, female, 12 poles, A-coded
EASY Encoder		M12, female, 8 poles, A-coded
Break		M8, male, 3 poles, A-coded

Operating range

n[rpm] Gear ratio X:1 15.6

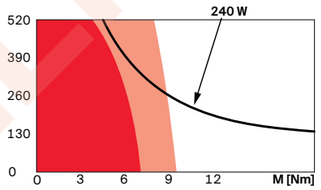

n[rpm] Gear ratio X:1 35

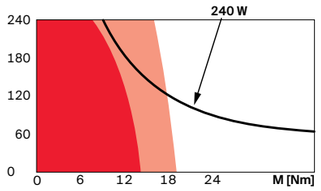

- Continuous operation
- Continuous operation with reduced thermal resistance R_{th2} 50%
- Short term operation
- **Assigned power rating**

Preliminary data. This product is currently only available upon request.

© 2026 maxon. All rights reserved. Subject to change.

MW 500 Wheel Drive
48 V | 500 kg payload

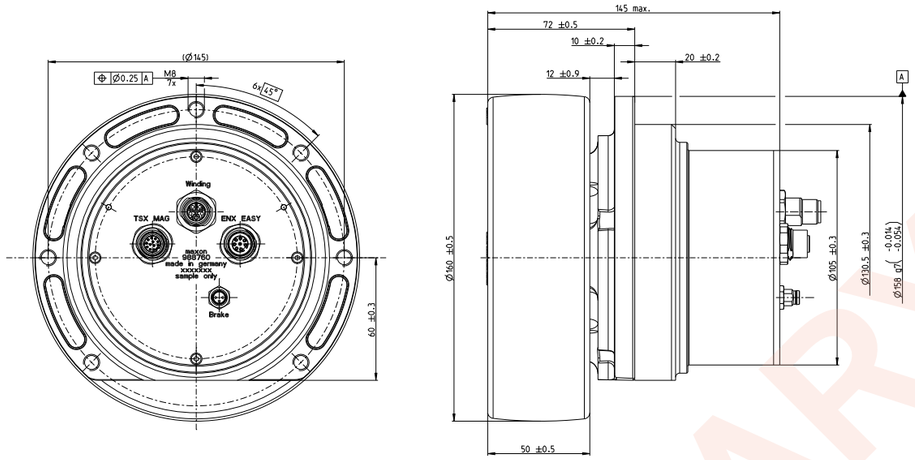

M 1:3

Drive data				
Gear ratio	X:1	16	32	-
Nominal supply voltage	VDC	48	48	-
Nominal output speed	rpm	160	80	At nominal operating point
Maximum output speed	rpm	190	95	No-load output speed at 48 V
Nominal output torque (max. continous torque)	Nm	20	40	At nominal operating point
Peak output torque	Nm	50	80	Short-term operating range max. 3 s
Nominal output power	W	335	335	At nominal operating point
Peak output power	W	670	670	Short-term operating range max. 3 s
Peak duty cycle	%	5	5	Maximum cumulative peak operating time
Holding brake				
Braking torque at output	Nm	32	64	

Specifications		
Type of protection	IP	54
Operating temperature	°C	0... +50°C
Max. radial load	kg	500

Other specifications		
Wheel		
Wheel Diameter	mm	160, 180
Connector		
Power		M12, male, 4 poles, L-coded
TSX MAG Encoder		M12, female, 12 poles, A-coded
EASY Encoder		M12, female, 8 poles, A-coded
Break		M8, male, 3 poles, A-coded

Operating range

n[rpm] Gear ratio X:1 16

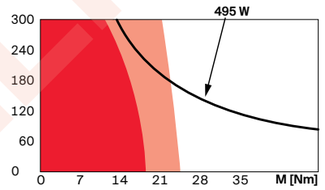

n[rpm] Gear ratio X:1 32

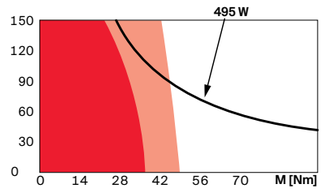

- Continuous operation
- Continuous operation with reduced thermal resistance R_{th2} 50%
- Short term operation
- **Assigned power rating**

Preliminary data. This product is currently only available upon request.

© 2026 maxon. All rights reserved. Subject to change.

MW IDX 70 L Wheel Drive
48-60 V | 500 kg payload

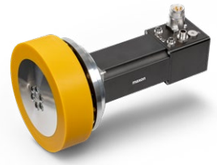

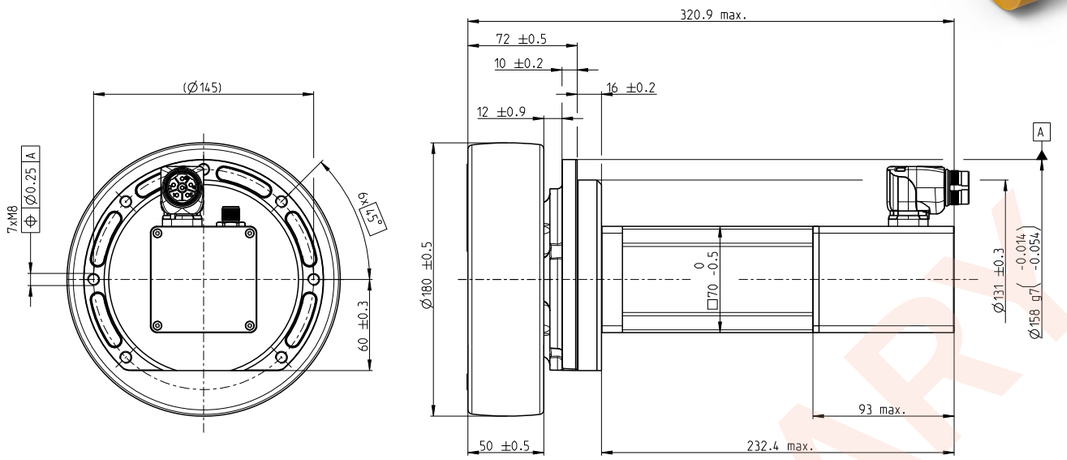

M 1:4

Drive data			
Gear ratio	X:1	16	-
Nominal supply voltage	VDC	48	-
Nominal output speed	rpm	150	At nominal operating point
Maximum output speed	rpm	160	No-load output speed at 48 V
Nominal output torque (max. continous torque)	Nm	40	At nominal operating point
Peak output torque	Nm	80	Short-term operating range max. 3 s
Nominal output power	W	628	At nominal operating point
Peak output power	W	942	Short-term operating range max. 3 s
Peak duty cycle	%	5	Maximum cumulative peak operating time

Specifications		
Operating temperature	°C	0... +50°C
Max. radial load	kg	500

Other specifications		
Wheel		
Wheel Diameter (Customized)	mm	160, 180

IDX 70	
Connector	
Power	M23, male, 6 poles, N-coded
Sensor	M12, male, 17 poles, A-coded

Operating range

n[rpm] Gear ratio X:1 16

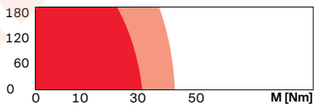

Preliminary data. This product is currently only available upon request.

PRELIMINARY

© 2026 maxon. All rights reserved. Subject to change.

For your personal notes

© 2026 maxon. All rights reserved.

Level 3
Systems & Sub-systems

Systems and subsystems are higher-complexity solutions, encompassing complete systems or subsystems for your production or service operations.

IDX Safe

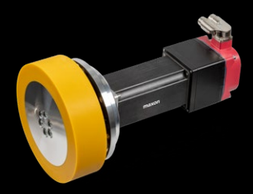

MW – IDX Wheel Drive Safe

MW – Wheel Drive Safe

HEJ

IDX Safe	62
MW – IDX Wheel Drive Safe	63
MW – Wheel Drive Safe	64–65
HEJ	66–71

The page numbers referenced in the following data sheets correspond to the **maxon Product Program 2026/27.**

© 2026 maxon. All rights reserved.
© 2026 maxon. All rights reserved.

IDX 70 S Safe □70 mm, with integrated electronics

IP65 drive with positioning/speed controller, incl. certified STO & SBC functions

Key data: 700/720 W, 1720 mNm, 6000 rpm

EtherCAT CANopen PROFINET EtherNet/IP

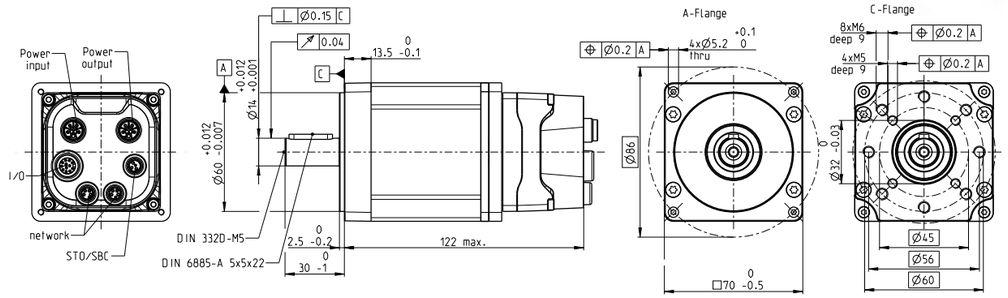

M 1:3

Drive data (provisional)				
1_ Nominal power supply voltage	V	24	48	60
2_ Nominal speed	rpm	4000	4000	4000
3_ Nominal torque[1] at 25°C	mNm	1680	1720	1670
4_ Nominal torque[1] at 40°C	mNm	1550	1590	1550
5_ Nominal supply current[1] at 25°C	A	31.7	17.4	13.6
6_ Nominal supply current[1] at 40°C	A	34.4	16.0	12.5
7_ Maximum speed at nominal voltage	rpm	4100	4100	4280
8_ Maximum permissible drive speed	rpm	6000	5150	4060
9_ Maximum torque (short-time)	mNm	3410	5400	5290
10_ Maximum supply current (short-time)	A	55	46	48
11_ Rotor inertia of the drive	gcm^2	568	568	568
12_ Nominal supply voltage + V_{CC}	V	24...60	24...60	24...60
13_ Mechanical time constant	ms	0.598	0.543	0.569

Thermal data		
14_ Thermal resistance housing-ambient	K/W	1.92
15_ Thermal resistance winding-housing	K/W	0.91
16_ Thermal time constant winding	s	54.3
17_ Thermal time constant drive	s	1260
18_ Ambient temperature[2]	°C	-0...+40

Mechanical data		
19_ Axial play	mm	0.22
Preload	N	28
Direction of force		Pull
20_ Radial play		preloaded
21_ Max. axial load (dynamic)	N	22
22_ Max. force for press fits (static)	N	270
23_ Max. radial load [mm from flange]	N	300 [15]

Other specifications		
24_ Weight of the drive	g	1500
25_ Typical noise level [rpm]	dBA	
Protection class without shaft		IP65
Functional safety features		
		Safe Torque Off (STO), Safe Brake Control (SBC)
Security integrity level		SIL 3, PLe-Cat. 3

For more information on functional safety, refer to page 88

Operating range

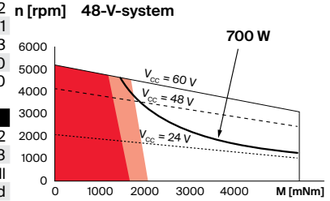

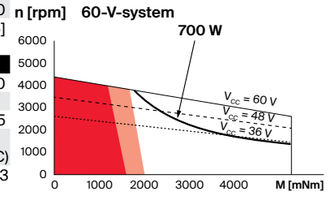

- Continuous operation
- Continuous operation with reduced thermal resistance R_{th2} = 0.9 K/W
- Short term operation

Sensor

Integrated single-turn absolute encoder	
Resolution	12, 14, 18 bits
Integrated multi-turn absolute encoder (battery-free)	
Resolution (single-turn)	14, 18 bits
Max. number of turns (multi-turn)	16384

Modular system Details on catalog page 48

Gearheads	Stages [opt.]	Sensors	Control Electronics
371_GPX 70 A/UP	1-2	integrated	integrated
372_GPX 70 LN	1-2		
399_GB 12	1		
400_GB 9	1	**Accessories**	
401_GB 65	2	481_Brake AB 60 S	

Connector

Power	M12, male, 4+1-pole, L-coded
STO/SBC	M8, female, 3-pole, A-coded
Network	M8, female, 4-pole, A-coded
I/O connector	M12, female, 12-pin, A-coded
Single-cable technology	Hybrid I, plug for power and signals, 1× male
Single-cable technology	Hybrid Y, plug for power and signals, 1× male and 1× female

Compatible cables available online in the configurator.

[1]The nominal values refer to a reduced thermal resistance between the housing and air of 0.9 K/W. Typical installation to achieve these values: Mounting on an aluminum plate with dimensions of 250×250×10 mm.
[2]Higher ambient temperatures are possible with a reduction in motor power.

Configuration

Motor flange: A flange/C flange
Communication protocols: EtherCAT, ProfiNet, EtherNet/IP, CanOpen (on request)
Plug options: Metric (M8/M12), Hybrid Y, Hybrid I
Shaft: Standard with feather key/small diameter without feather key

© 2026 maxon. All rights reserved. Subject to change.

MW IDX 70 L Safe Wheel Drive

48-60 V | 500 kg payload

EtherCAT CANopen PROFINET EtherNet/IP

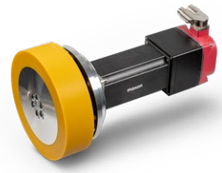

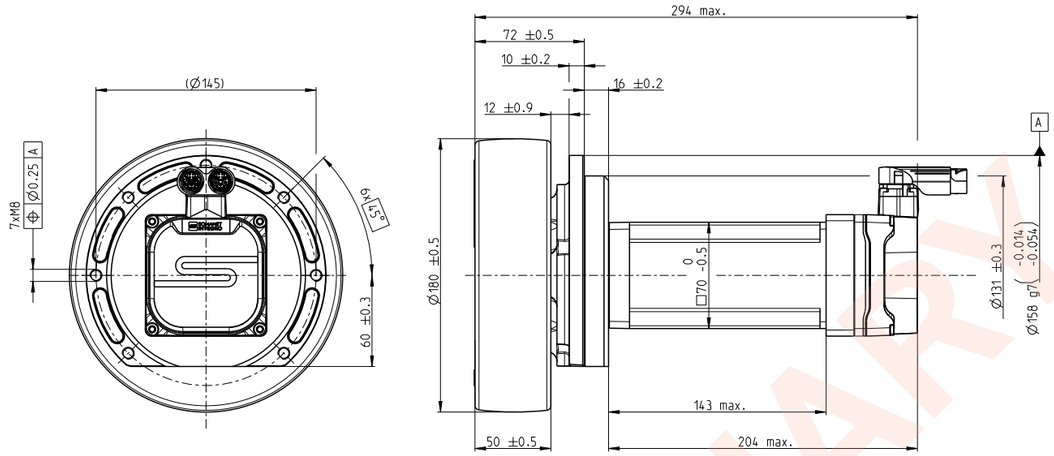

M 1:4

Drive data			
Gear ratio	X:1	16	-
Nominal supply voltage	VDC	48	-
Nominal output speed	rpm	150	At nominal operating point
Maximum output speed	rpm	160	No-load output speed at 48 V
Nominal output torque (max. continous torque)	Nm	40	At nominal operating point
Peak output torque	Nm	80	Short-term operating range max. 3 s
Nominal output power	W	628	At nominal operating point
Peak output power	W	942	Short-term operating range max. 3 s
Peak duty cycle	%	5	Maximum cumulative peak operating time

Specifications		
Operating temperature	°C	0... +50°C
Max. radial load	kg	500

Operating range

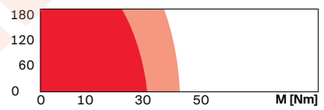

Other specifications		
Wheel		
Wheel Diameter (Customized)	mm	160, 180
Protection class without shaft	IP	65
Functional safety features		
		Safe Torque Off (STO), Safe Brake Control (SBC)
Security integrity level		SIL 3, PLe-Cat. 3

Sensor

Integrated single-turn absolute encoder	
Resolution	12, 14, 18 bits
Integrated multi-turn absolute encoder (battery-free)	
Resolution (single-turn)	14, 18 bits
Max. number of turns (multi-turn)	16384

Connector

Power	M12, male, 4+1-pole, L-coded
STO/SBC	M8, female, 3-pole, A-coded
Network	M8, female, 4-pole, A-coded
I/O connector	M12, female, 12-pin, A-coded
Single-cable technology	Hybrid I, plug for power and signals, 1× male
Single-cable technology	Hybrid Y, plug for power and signals, 1× male and 1× female

Compatible cables available online in the configurator.

Preliminary data. This product is currently only available upon request.

PRELIMINARY

© 2026 maxon. All rights reserved. Subject to change.

MW 250 Safe Wheel Drive
48 V | 250 kg payload

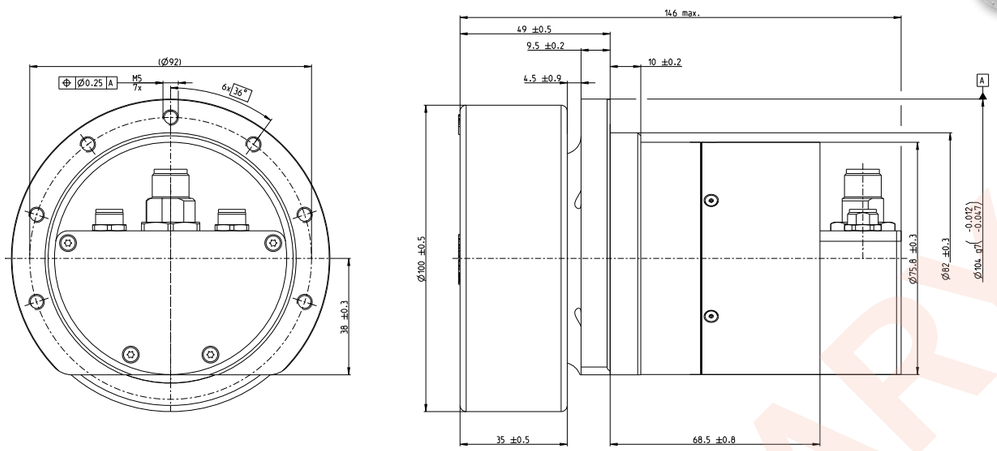

M 1:2

Drive data				
Gear ratio	X:1	15.6	35	-
Nominal supply voltage	VDC	48	48	-
Nominal output speed	rpm	235	110	At nominal operating point
Maximum output speed	rpm	300	133	No-load output speed at 48 V
Nominal output torque (max. continous torque)	Nm	7	16	At nominal operating point
Peak output torque	Nm	17.5	40	Short-term operating range max. 3 s
Nominal output power	W	172	184	At nominal operating point
Peak output power	W	345	369	Short-term operating range max. 3 s
Peak duty cycle	%	5	5	Maximum cumulative peak operating time
Holding brake				
Braking torque at output	Nm	15	30	

Specifications		
Type of protection	IP	54
Operating temperature	°C	0... +50°C
Max. radial load	kg	250

Other specifications		
Wheel		
Wheel Diameter	mm	100, 120
Controller		
Safety Controller		FSoE
Supply		M12, male, 5 poles, L-coded
EtherCAT Input		M8, female, 4 poles, A-coded
EtherCAT Output		M8, female, 4 poles, A-coded

Functional safety features
Safe Torque Off (STO), Safe Brake Control (SBC)
Safe Limited Speed (SLS), ect.

Security integrity level
SIL 3, PLe-Cat. 3

For more information on functional safety,
refer to page 76/77

Operating range

n[rpm] Gear ratio X:1 15.6

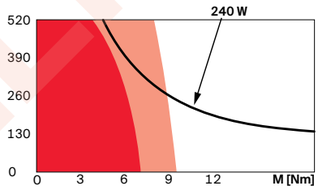

n[rpm] Gear ratio X:1 35

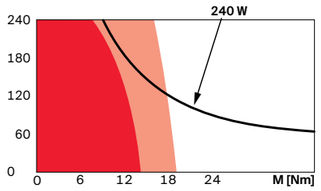

- Continuous operation
- Continuous operation with reduced thermal resistance R_{th2} 50%
- Short term operation
- **Assigned power rating**

Preliminary data. This product is currently only available upon request.

© 2026 maxon. All rights reserved. Subject to change.

MW 500 Safe Wheel Drive
48 V | 500 kg payload

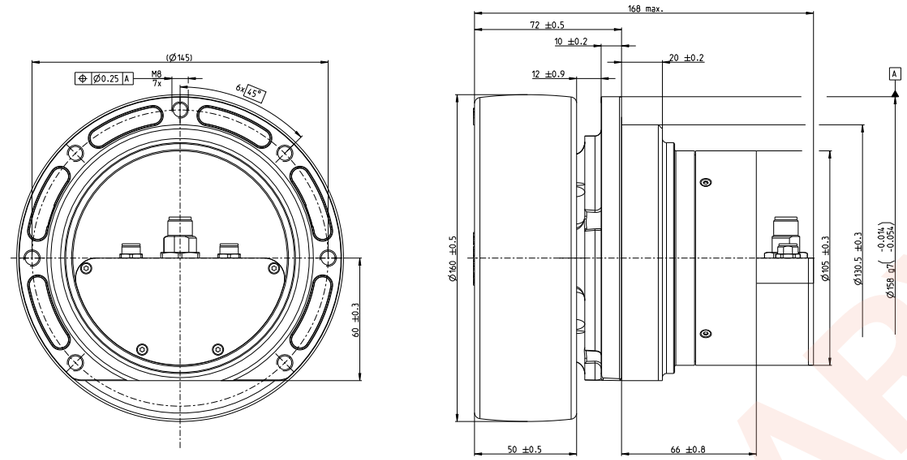

M 1:3

Drive data				
Gear ratio	X:1	16	32	-
Nominal supply voltage	VDC	48	48	-
Nominal output speed	rpm	160	80	At nominal operating point
Maximum output speed	rpm	190	95	No-load output speed at 48 V
Nominal output torque (max. continous torque)	Nm	20	40	At nominal operating point
Peak output torque	Nm	50	80	Short-term operating range max. 3 s
Nominal output power	W	335	335	At nominal operating point
Peak output power	W	670	670	Short-term operating range max. 3 s
Peak duty cycle	%	5	5	Maximum cumulative peak operating time
Holding brake				
Braking torque at output	Nm	32	64	

Specifications		
Type of protection	IP	54
Operating temperature	°C	0... +50°C
Max. radial load	kg	500

Other specifications		
Wheel		
Wheel Diameter	mm	160, 180
Controller		
Safety Controller		FSoE
Supply		M12, male, 5 poles, L-coded
EtherCAT Input		M8, female, 4 poles, A-coded
EtherCAT Output		M8, female, 4 poles, A-coded

Functional safety features
Safe Torque Off (STO), Safe Brake Control (SBC)
Safe Limited Speed (SLS), ect.

Security integrity level
SIL 3, PLe-Cat. 3

For more information on functional safety,
refer to page 76/77

Operating range

n[rpm] Gear ratio X:1 16

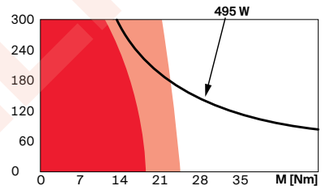

n[rpm] Gear ratio X:1 32

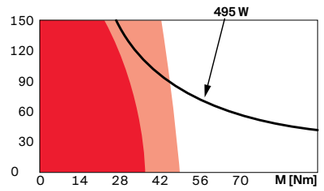

- Continuous operation
- Continuous operation with reduced thermal resistance R_{th2} 50%
- Short term operation
- **Assigned power rating**

Preliminary data. This product is currently only available upon request.

© 2026 maxon. All rights reserved. Subject to change.

High Efficiency Joint 50-48-30

30–60 V | 28 Nm | 26 rad/s

This is a highly compact, integrated and efficient robotic drive system that contains all subsystems to provide a full motion solution, such as controller, motor, gearing and sensing. This drive is enclosed, impact-rated, and designed for continuous operation at very low losses. It offers high robustness and a long operating lifetime. Controlled via EtherCAT, it features an advanced impedance controller, rendering it suitable for modern robotics applications. Simulation models enable dependable robotic system designs.

All data are provided for U_{DC} = 48 V and T_{amb} = 25 °C, unless otherwise specified. Specifications for different voltage levels or other operating limits, and corresponding simulation models, are available upon request.

Output Characteristics

Maximum joint velocity	UDC = 48 V	±21 rad/s
	UDC = 60 V	±26 rad/s
Maximum joint torque, actively controlled & repetitive This torque can be applied for ca. 1s2s before the temperature protection activates.		±28 Nm
Nominal joint torque This torque can be maintained *indefinitely* without external forced air cooling. Conditions: Actuator mounted in free space and with a joint velocity of 2 rad/s. The time constants are long, i.e., considerably higher quasicontinuous torques can be applied for durations up to a few minutes.		±11 Nm

Power Conversion Characteristics Motor Operating Quadrants

U_{DC} (V) DC-Link Voltage	V_{joint} (rad/s) Joint Velocity	M_{joint} (Nm) Joint Torque	I_{in} (A) DC-Link Input Curr.	P_{loss} (W) Total System Loss	Efficiency (%) $P_{out,mech}$ / $P_{in,elec}$	
48	0	0	0.04	2.0	0	●
48	0	29	3.1	184	0	▲
48	0	20	1.1	65	0	▲
48	0	15	0.6	36	0	▲
48	0	10	0.3	17	0	●
48	0	5	0.1	6	0	●
48	10	0	0.3	19	0	●
48	10	25	7.3	190	57	▲
48	10	20	5.2	114	64	▲
48	15	0	0.5	30	0	●
48	15	20	7.2	133	69	▲
48	15	10	3.5	61	71	▲
48	20	0	0.7	43	0	▲
48	20	5	2.6	56	64	▲
60	25	0	0.96	58	0	●
60	25	10	3.8	77	66	▲

Operating points with a triangle (▲) can only be maintained for short times (some seconds, due to thermal limitations [mainly: continuous input current limited to 4.7 A_{RMS}]). Operating points marked with a circle (●) can be maintained continuously but potentially require adequate external forced air cooling.

Power Conversion Performance Map

Motor Operating Quadrants

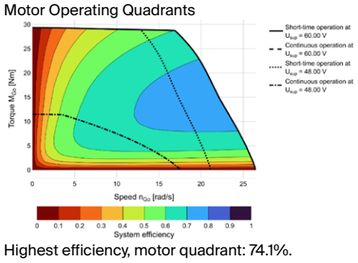

Highest efficiency, motor quadrant: 74.1%.

Electrical Characteristics

Operating input voltage range (voltages as low as 20 V are possible but can have implications – contact us.)	30–60 V
Max. allowable transient input voltage (e.g., due to inductive spikes or noise on the supply bus)	67.0 V
DC link input capacitance (MLCC)	100 µF
Max. power supply input current During transients or accelerations, the system can create high current peaks. Capacitive inrush current not considered. Unloaded joint.	< 40 A
Max. continuous power supply current Input currents may only exceed this value for very short periods of time to prevent damage to the power connector or internal cabling.	4.7 A_{RMS}

© 2026 maxon. All rights reserved.

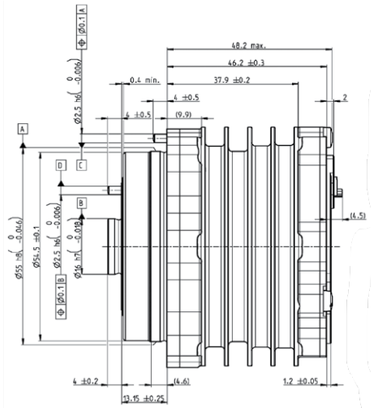

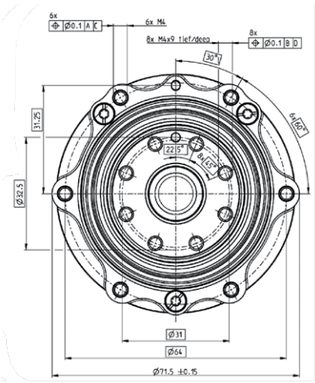

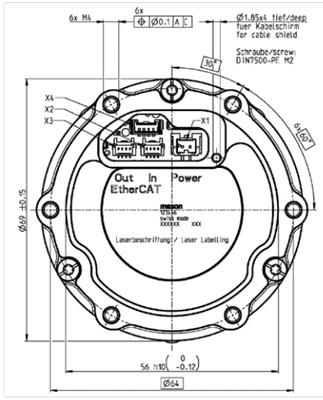

© 2026 maxon. All rights reserved.

Control Characteristics

Control modes	**Joint position, velocity, torque, motor current (FOC)** **Joint impedance controller** (simultaneous control of position, velocity, torque) **PDO-mappable control gains** Internal cogging, friction and backlash compensation systems
Joint position sensor	**Type: Absolute SingleTurn.** **Resolution: 14 bit. Absolute angular error: < 0.01 rad (0.6°).** Note that the firmware applies sensor fusion techniques to reduce noise and INL error on this encoder signal. This sensor measures the absolute output position (after the gear).
Joint torque measurement Via electric motor current, compensated	**Absolute error, steady-state: < 0.8 Nm**
Joint velocity filtering	**Configurable lowpass**
Controller execution rate	**Current controller (FOC): 25 kHz; All others: 2.5 kHz;** **PWM frequency: 50 kHz**
Max. EtherCAT communication rate	**1 kHz**
Internal temperature sensors	**Motor winding and power electronics, PDO-mappable**
Motor temperature i2t protection	**Configurable**
Mechanical backlash Fixed motor position, movement of the joint.	**0.5° (average)** A backlash compensator is available in firmware. A lowbacklash hardware design is available upon request.
Tot. mech. moment of inertia, at joint	**56 kgcm²**
Backdriving torque (system disabled, including joint seal friction)	**< 0.8 Nm**

Environmental Characteristics

Ingress protection	The default configuration of this drive (P/N 922156) does not come with an ingressprotected backcap. The PCBmounted connectors are exposed to the elements. IPsealed backcovers with industrial connectors are available upon request. All other IP seals are always mounted in the default unit (P/N 922156).
Ambient operating temperature	**–20 to +60 °C** (might require adequate cooling if the system exhibits losses)
Thermal interface Note: The thermal dissipation capability serves only as an indication. Actual performance depends on external heat transfer system and environment. Details are available upon request.	**Integrated heat sinks for forced air cooling. Continuous thermal dissipation** (passive convective cooling) **up to ca. 36 W.**
Thermal resistance winding-housing	**1.4 K/W**
Thermal time constant winding	**15.9 s**

Lifetime Characteristics

Note: A high emphasis was put on creating a highly reliable and robust product. Nonetheless, the operating lifetime of this drive strongly depends on its load cases and environmental aspects. The indicated values are only a (simplified) guideline. Further details are available upon request.

High-cycle fatigue: Joint impact/overtorque events	**12e6 impacts at 23 Nm** **100e3 impacts at 30 Nm** **1e3 impacts at 40 Nm**
Lifetime at constant operation Note 1: Depending on environmental factors (e.g., temperature, dust or chemicals exposure), the joint output seal may potentially degrade earlier. Note 2: These operating points are naturally dependent on temperature and specific aspects of the load cycle and gear lubrication life. Details can be provided upon request.	**10 Nm, 22 rad/s: >56 000 h** **30 Nm, 5 rad/s: >56 000 h**

Mechanical Characteristics

Axial length	**ca. 65 mm**
Diameter	**ca. 71.5 mm**
Mass	**0.53 kg**
Crossroller joint output bearing The system provides an integrated crossroller bearing. Its load cases can be complex. Contact us for assistance, especially regarding acceptable safety factors. A stronger crossroller bearing is available upon request.	**Bearing: THK RAU4005 or similar** Dia = 51 mm, C = 2140 N, C0 = 2740 N

Electrical Interfaces

Connectors:	**1×Power supply, 2×EtherCAT (allows daisychaining of several systems), 1×USB (only for debugging/testing).** IP67rated covers with industrial connectors are available upon request.
EtherCAT	**Full Duplex, 100 Mbit/s**
Functional safety	**Under development. Please contact us for details.**
Grounding concept	**All housing parts connected to DC link GND via RC network. Provision to connect EtherCAT shield to housing.**

High Efficiency Joint 70-48-60

30–60 V | 28 Nm | 26 rad/s

This is a highly compact, integrated and efficient robotic drive system that contains all subsystems to provide a full motion solution, such as controller, motor, gearing and sensing. This drive is enclosed, impactrated, and designed for continuous operation at very low losses. It offers high robustness and a long operating lifetime. Controlled via EtherCAT, it features an advanced impedance controller, rendering it suitable for modern robotics applications. Simulation models enable dependable robotic system designs.

All data are provided for U_{DC} = 48 V and T_{amb} = 25 °C, unless otherwise specified. Specifications for different voltage levels or other operating limits, and corresponding simulation models, are available upon request.

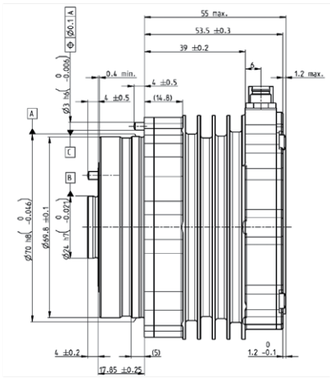

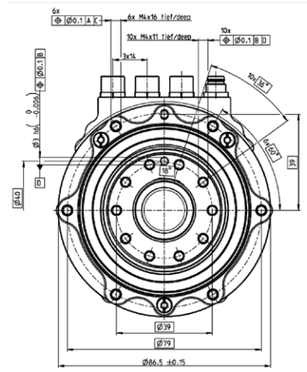

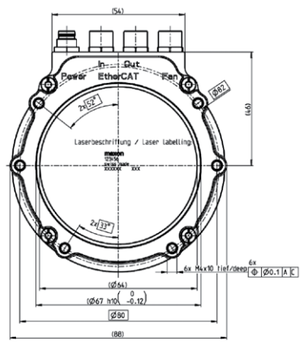

Output Characteristics

Maximum joint velocity	UDC = 48 V	±17.8 rad/s
	UDC = 60 V	±22 rad/s
Maximum joint torque, actively controlled & repetitive This torque can be applied for ca. 1s2s before the temperature protection activates.		±63 Nm
Nominal joint torque This torque can be maintained *indefinitely* without external forced air cooling. Conditions: Actuator mounted in free space and with a joint velocity of 2 rad/s. The time constants are long, i.e., considerably higher quasicontinuous torques can be applied for durations up to a few minutes.		±27 Nm

Power Conversion Characteristics Motor Operating Quadrants

U_{DC} (V) DC-Link Voltage	V_{joint} (rad/s) Joint Velocity	M_{joint} (Nm) Joint Torque	I_{in} (A) DC-Link Input Curr.	P_{loss} (W) Total System Loss	Efficiency (%) $P_{out,mech}$ / $P_{in,elec}$	
48	0	0	0.04	2	0	●
48	0	60	6.5	392	0	▲
48	0	50	3.1	184	0	▲
48	0	40	1.5	90	0	▲
48	0	27	0.8	48	0	●
48	0	20	0.4	22	0	●
48	0	10	0.1	7	0	●
48	10	0	0.3	19	0	●
48	10	50	13.3	297	63	▲
48	10	20	4.3	57	78	▲
48	15	0	0.5	30	0	●
48	15	30	8.8	106	80	▲
48	15	20	6.2	75	80	▲
48	15	10	3.3	47	76	●
48	15	0	0.7	44	0	●
60	20	0	0.7	44	0	●
60	20	10	4.4	64	76	▲

Operating points with a triangle (▲) can only be maintained for short times (some seconds, due to thermal limitations [mainly: continuous input current limited to 4.7 A_{RMS}]). Operating points marked with a circle (●) can be maintained continuously but potentially require adequate external forced air cooling.

Power Conversion Performance Map

Motor Operating Quadrants

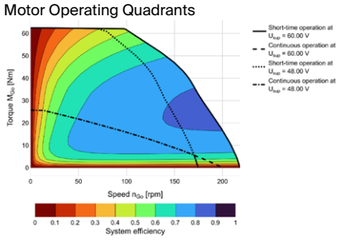

Highest efficiency, motor quadrant: ca. 81.4%.

Electrical Characteristics

Operating input voltage range (voltages as low as 20 V are possible but can have implications – contact us.)	30–60 V
Max. allowable transient input voltage (e.g., due to inductive spikes or noise on the supply bus)	67.0 V
DC link input capacitance (MLCC)	240 µF
Max. power supply input current During transients or accelerations, the system can create high current peaks. Capacitive inrush current not considered. Unloaded joint.	< 40 A
Max. continuous power supply current Input currents may only exceed this value for very short periods of time to prevent damage to the power connector or internal cabling. This is a conservative limit – please approach us if you plan on exceeding this limit.	8.0 A_{RMS}

Control Characteristics

Control modes	**Joint position, velocity, torque, motor current (FOC)** **Joint impedance controller** (simultaneous control of position, velocity, torque) **PDO-mappable control gains** Internal cogging, friction and backlash compensation systems
Joint position sensor	**Type: Absolute SingleTurn.** **Resolution: 14 bit. Absolute angular error: < 0.01 rad (0.6°).** Note that the firmware applies sensor fusion techniques to reduce noise and INL error on this encoder signal. This sensor measures the absolute output position (after the gear).
Joint torque measurement Via electric motor current, compensated	**Absolute error, steady-state: < 0.8 Nm**
Joint velocity filtering	**Configurable lowpass**
Controller execution rate	**Current controller (FOC): 25 kHz; All others: 2.5 kHz;** **PWM frequency: 50 kHz**
Max. EtherCAT communication rate	**1 kHz**
Internal temperature sensors	**Motor winding and power electronics, PDO-mappable**
Motor temperature i2t protection	**Configurable**
Mechanical backlash Fixed motor position, movement of the joint.	**0.5° (average)** A backlash compensator is available in firmware. A lowbacklash hardware design is available upon request.
Tot. mech. moment of inertia, at joint	**112 kgcm²**
Backdriving torque (system disabled, including joint seal friction)	**< 1.0 Nm**

Environmental Characteristics

Ingress protection	**IP67, also with rotating joint and applied bending moments.**
Ambient operating temperature	**–20 to +60 °C** (might require adequate cooling if the system exhibits losses)
Thermal interface Note: The thermal dissipation capability serves only as an indication. Actual performance depends on external heat transfer system and environment. Details are available upon request.	**Integrated heat sinks for forced air cooling. Continuous thermal dissipation** (passive convective cooling) **up to ca. 50 W. Integrated and user-controllable fan power supply.**
Thermal resistance winding-housing	**0.38 K/W**
Thermal time constant winding	**12 s**

Lifetime Characteristics

Note: A high emphasis was put on creating a highly reliable and robust product. Nonetheless, the operating lifetime of this drive strongly depends on its load cases and environmental aspects. The indicated values are only a (simplified) guideline. Further details are available upon request.

High-cycle fatigue: Joint impact/overtorque events	**12e6 impacts at 38 Nm** **100e3 impacts at 50 Nm** **1e3 impacts at 67 Nm**
Lifetime at constant operation Note 1: Depending on environmental factors (e.g., temperature, dust or chemicals exposure), the joint output seal may potentially degrade earlier. Note 2: These operating points are naturally dependent on temperature and specific aspects of the load cycle and gear lubrication life. Details can be provided upon request.	**10 Nm, 22 rad/s: >56 000 h** **30 Nm, 5 rad/s: >56 000 h**

Mechanical Characteristics

Axial length	**ca. 77 mm**
Diameter	**ca. 88 mm**
Mass	**1.04 kg**
Crossroller joint output bearing The system provides an integrated crossroller bearing. Its load cases can be complex. Contact us for assistance, especially regarding acceptable safety factors. A stronger crossroller bearing is available upon request.	**Bearing: THK RA5008 or similar** Dia = 66 mm, C = 5100 N, C0 =7190 N

Electrical Interfaces

Connectors: (up to) 4×M8	**1×Power supply, 2×EtherCAT (allows daisy-chaining of several systems), 1×fan power and control (radial connector version only).**
EtherCAT	**Full Duplex, 100 Mbit/s**
Functional safety	**Under development. Please contact us for details.**
Grounding concept	**All housing parts connected to DC link GND via RC network. Provision to connect EtherCAT shield to housing.**
Fan power and control To supply an external cooling fan.	**Power: 12 V, max. 700 mA. Control: PWM (Open Drain, 25 kHz). Tacho input: Pull-up, 10 kΩ.**

© 2026 maxon. All rights reserved.
© 2026 maxon. All rights reserved.

High Efficiency Joint 90-48-140

30–60 V | 28 Nm | 26 rad/s

This is a highly compact, integrated and efficient robotic drive system that contains all subsystems to provide a full motion solution, such as controller, motor, gearing and sensing. This drive is enclosed, impactrated, and designed for continuous operation at very low losses. It offers high robustness and a long operating lifetime. Controlled via EtherCAT, it features an advanced impedance controller, rendering it suitable for modern robotics applications. Simulation models enable dependable robotic system designs.

All data are provided for U_{DC} = 48 V and T_{amb} = 25 °C, unless otherwise specified. Specifications for different voltage levels or other operating limits, and corresponding simulation models, are available upon request.

Output Characteristics

Maximum joint velocity	UDC = 48 V	±10.4 rad/s
	UDC = 60 V	±13.0 rad/s
Maximum joint torque, actively controlled & repetitive This torque can be applied for ca. 1s2s before the temperature protection activates.	±140 Nm (±180 Nm-variant available upon request)	
Nominal joint torque This torque can be maintained *indefinitely* without external forced air cooling. Conditions: Actuator mounted in free space and with a joint velocity of 2 rad/s. The time constants are long, i.e., considerably higher quasicontinuous torques can be applied for durations up to a few minutes.		±75 Nm

Power Conversion Characteristics Motor Operating Quadrants

U_{DC} (V) DC-Link Voltage	V_{joint} (rad/s) Joint Velocity	M_{joint} (Nm) Joint Torque	I_{in} (A) DC-Link Input Curr.	P_{loss} (W) Total System Loss	Efficiency (%) $P_{out,mech}$ / $P_{in,elec}$	
48	0	0	0.04	2.2	0	●
48	0	140	13.8	664.1	0	▲
48	0	80	3.6	172.9	0	▲
48	0	60	1.9	92	0	●
48	0	30	0.5	24.2	0	●
48	5	100	17.7	350.4	59	▲
48	5	140	30.1	744	48	▲
48	6	50	8.4	105.2	74	▲
48	6	100	20	362.1	62	▲
48	6	135	31.3	693.5	54	▲
48	8	50	10.8	119.8	77	▲
48	8	100	24.7	385.7	67	▲
48	10	25	6.5	66.1	79	●
60	6	135	25	693.5	54	▲
60	10.5	100	23.7	396.5	72	▲
60	12	50	12.5	150	80	▲
60	13	0	0.6	38.1	0	●

Operating points with a triangle (▲) can only be maintained for short times (some seconds, due to thermal limitations [mainly: continuous input current limited to 4.7 A_{RMS}]). Operating points marked with a circle (●) can be maintained continuously but potentially require adequate external forced air cooling.

Power Conversion Performance Map

Motor Operating Quadrants

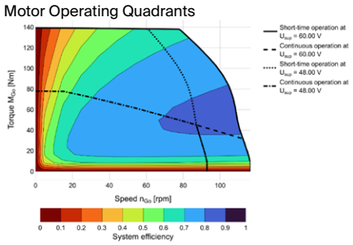

Highest efficiency, motor quadrant: ca. 86.1%.

Electrical Characteristics

Operating input voltage range (voltages as low as 20 V are possible but can have implications – contact us.)	30–60 V
Max. allowable transient input voltage (e.g., due to inductive spikes or noise on the supply bus)	67.0 V
DC link input capacitance (MLCC)	165 µF
Max. power supply input current During transients or accelerations, the system can create high current peaks. Capacitive inrush current not considered. Unloaded joint.	< 40 A
Max. continuous power supply current Input currents may only exceed this value for very short periods of time to prevent damage to the power connector or internal cabling. Please approach us if you plan on exceeding this limit.	8.0 A_{RMS}

© 2026 maxon. All rights reserved.

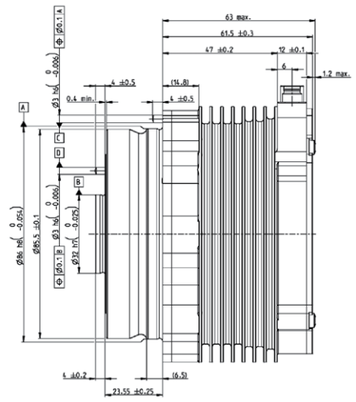

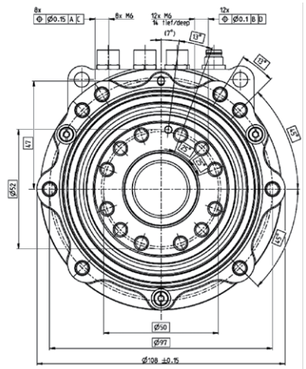

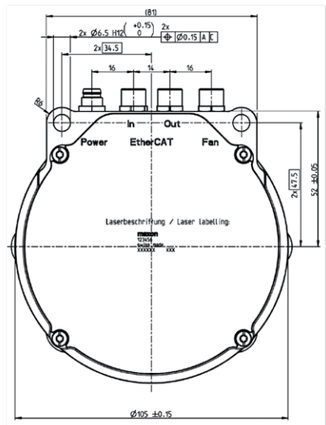

© 2026 maxon. All rights reserved.

Control Characteristics

Control modes	**Joint position, velocity, torque, motor current (FOC)** **Joint impedance controller** (simultaneous control of position, velocity, torque) **PDO-mappable control gains** Internal cogging, friction and backlash compensation systems
Joint position sensor	**Type: Absolute SingleTurn.** **Resolution: 12 bit. Absolute angular error: < 0.008 rad (0.5°).** Note that the firmware applies sensor fusion techniques to reduce noise and INL error on this encoder signal. This sensor measures the absolute output position (after the gear).
Joint torque measurement Via electric motor current, compensated	**Absolute error, steady-state: < 1.5 Nm**
Joint velocity filtering	**Configurable lowpass**
Controller execution rate	**Current controller (FOC): 25 kHz; All others: 2.5 kHz; PWM frequency: 50 kHz**
Max. EtherCAT communication rate	**1 kHz**
Internal temperature sensors	**Motor winding and power electronics, PDO-mappable**
Motor temperature i2t protection	**Configurable**
Mechanical backlash Fixed motor position, movement of the joint.	**0.5° (average)** A backlash compensator is available in firmware. A lowbacklash hardware design is available upon request.
Tot. mech. moment of inertia, at joint	**0.045 kgm²**
Backdriving torque (system disabled, including joint seal friction)	**< 1.5 Nm**
Acceleration time	**< 8 ms** (Time it takes to accelerate the joint from standstill to its maximum velocity)

Environmental Characteristics

Ingress protection	**IP67, also with rotating joint and applied bending moments.**
Ambient operating temperature	**–20 to +60 °C** (might require adequate cooling if the system exhibits losses)
Thermal interface Note: The thermal dissipation capability serves only as an indication. Actual performance depends on external heat transfer system and environment. Details are available upon request.	**Integrated heat sinks for forced air cooling. Continuous thermal dissipation (active cooling) up to ca. 250 W. Integrated and user-controllable fan power supply.**
Thermal resistance winding-housing	**0.3 K/W**
Thermal time constant winding	**21 s**

Lifetime Characteristics

Note: A high emphasis was put on creating a highly reliable and robust product. Nonetheless, the operating lifetime of this drive strongly depends on its load cases and environmental aspects. The indicated values are only a (simplified) guideline. Further details are available upon request.

High-cycle fatigue: Joint impact/overtorque events	**12e6 impacts at 180 Nm** **100e3 impacts at 240 Nm** **1e3 impacts at 320 Nm**
Lifetime at constant operation Note 1: Depending on environmental factors (e.g., temperature, dust or chemicals exposure), the joint output seal may potentially degrade earlier. Note 2: These operating points are naturally dependent on temperature and specific aspects of the load cycle and gear lubrication life. Details can be provided upon request.	**30 Nm, 10 rad/s: 56 000 h** **60 Nm, 5 rad/s: 14 000 h**

Mechanical Characteristics

Axial length	**ca. 90 mm**
Diameter	**ca. 108 mm**
Mass	**2.006 kg** (radial version) **1.987 kg** (axial version)
Crossroller joint output bearing The system provides an integrated crossroller bearing. Its load cases can be complex. Contact us for assistance, especially regarding acceptable safety factors. A stronger crossroller bearing is available upon request.	**Bearing: THK RA6008 or similar** Dia = 76 mm, C = 5680 N, C0 = 8680 N

Electrical Interfaces

Connectors: (up to) 4×M8	**1×Power supply, 2×EtherCAT (allows daisy-chaining of several systems), 1×fan power and control (radial connector version only).**
EtherCAT	**Full Duplex, 100 Mbit/s**
Functional safety	**Under development. Please contact us for details.**
Grounding concept	**All housing parts connected to DC link GND via RC network. Provision to connect EtherCAT shield to housing.**
Fan power and control To supply an external cooling fan.	**Power: 12 V, max. 700 mA. Control: PWM (Open Drain, 25 kHz). Tacho input: Pull-up, 10 kΩ.**

A practical selection process

The 6 steps to selecting drive solution for AMRs

Selecting the right AMR drive combination involves more than motor sizing. maxon uses a structured six-step process to match the motor, gearhead, feedback and control system to the vehicle's loads, operating conditions, safety requirements and service life.

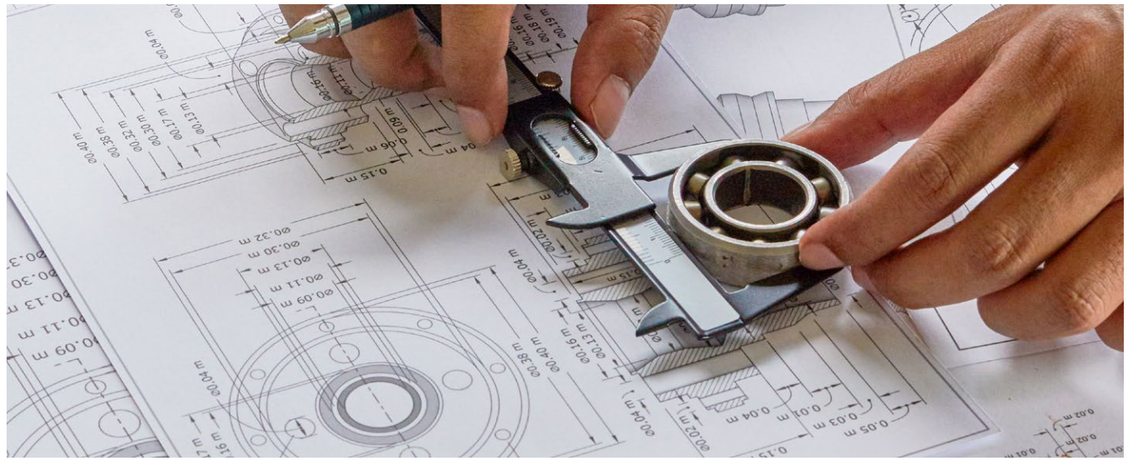

1. Analyze the complete application

The process begins with understanding how the vehicle will operate as a system. The vehicle layout, number of driven wheels, payload range, required speed, gradients, operating surface, and available installation space are then defined.

This phase should also cover environmental conditions such as dust, dirt, moisture, vibration and temperature, together with the expected duty cycle and service life. Control architecture, communication interfaces, battery voltage, functional-safety requirements, and possible failure scenarios must also be considered. For example, should a failed vehicle remain back-drivable so it can be moved, or must a vertical shuttle be held by a brake or self-locking mechanism?

Commercial requirements also belong here, including production volume, target cost, delivery scope, required customization and the timeline from samples to series production.

2. Determine the vehicle loads

The next step is to calculate the forces the vehicle must overcome during operation. These typically include rolling resistance, acceleration forces and gravitational forces when travelling on ramps or inclines.

The calculation should represent the complete operating cycle rather than one nominal condition. Frequent starts and stops, changing payloads, short peak loads, and periods of continuous movement all influence the result. The main outputs are:

- Average or RMS force during normal operation
- Peak force during acceleration or ramp travel
- Required vehicle speed
- Total mechanical or bearing load
- Duration and repetition of each load condition

These values create the technical basis for sizing the drive without unnecessary oversizing.

3. Define Wheel Drive requirements

The vehicle-level forces must then be translated into the requirements at each driven wheel. This depends on the number of driven wheels, wheel diameter, mechanical efficiency, and how evenly the vehicle weight is distributed. For each drive wheel, this needs to be determined:

- Continuous and peak wheel torque
- Required wheel speed in rpm
- Mechanical power
- Radial or shaft load
- Effects of uneven payload distribution

Wheel diameter is an important design variable. A larger wheel may increase the required torque but reduce rotational speed, while a smaller wheel has the opposite effect. At the end of this phase, the engineering team has the exact operating points needed to begin component selection.

4. Select the gearhead

The gearhead must convert the motor's higher speed and lower torque into the lower speed and higher torque required at the wheel. Selection therefore begins by checking continuous torque, short-term peak torque, permissible input speed, efficiency, and radial-load capacity.

The reduction ratio must be high enough to reduce the torque demand on the motor, but not so high that the motor or gearhead exceeds its permitted speed. The selected gearhead should also be evaluated against the expected duty cycle, shock loads, and service-life requirements. Additional application factors may include:

- Back-drivability when a failed vehicle must be moved
- Self-locking behavior for vertical movement
- Bearing capacity for direct wheel mounting
- Mechanical interfaces and installation dimension

5. Select the motor and winding

The motor must first be mechanically compatible with the selected gearhead. It must then provide sufficient continuous torque, peak torque, and speed across all operating points.

Motor selection should also consider:

- Battery and supply voltage
- Thermal behavior during the duty cycle
- Required ingress protection
- Maximum motor speed
- Available installation space
- Required overload capability

The motor winding is selected so that the drive can reach the required speed and torque within the available voltage. Allowance should be made for voltage losses in the controller and for a control reserve under unfavorable operating conditions.

Finally, continuous and peak motor currents are calculated. These values influence battery loading, cable sizing, heat generation, and the required current rating of the servo controller.

6. Verify feedback and control

Thefinalstepconfirmsthatthefeedbacksensorandservocontroller can operate the selected motor across the full application range.

The feedback system must provide sufficient resolution for the required speed control, positioning accuracy, and low-speed stability. In some applications, Hall sensors may be sufficient; others may require a higher-resolution encoder.

The controller must then be checked for:

- Continuous and peak current capability
- Supply-voltage compatibility
- Motor and feedback compatibility
- Required speed or position control mode
- Communication such as CANopen or EtherCAT
- Connection to the vehicle master and safety system

The complete drive should be verified against all continuous and peak operating points.

To learn more, download the complete guide to AMR drive selection and functional safety.

© 2026 maxon. All rights reserved.
© 2026 maxon. All rights reserved.

Functional safety in AMRs

Safety in Motion

As motion control systems take on increasingly sophisticated motion tasks, the demands placed on functional safety continue to grow. Every additional axis not only increases the need for dynamics and precision, but also for safe and reliable operation. Whether in autonomous mobile robots (AMRs), collaborative robots (cobots), or humanoid robots, machines are increasingly working alongside people and other machines. In these environments, motion must remain under control at all times – even in the event of a fault.

The required level of functional safety depends on the application. For many industrial systems, fundamental safety functions such as Safe Torque Off (STO) and Safe Brake Control (SBC) are sufficient. They ensure that drive torque can be safely removed or that a holding brake is activated in a controlled manner whenever necessary. However, as autonomy, system complexity, and dynamic performance continue to increase, motion control systems require more advanced safety capabilities. Modern robotic systems must not only stop safely but also monitor motion safely while remaining operational. This is achieved through safe motion functions such as Safe Limited Speed (SLS) and Safe Operating Stop (SOS). Safe communication between devices is commonly implemented using Fail Safe over EtherCAT (FSoE).

“From humanoids and quadrupeds to mobile manipulators, these systems are set to drive significant industrial and societal progress,” says Mario Mauerer, Robotics Expert at maxon. “At the same time, sensing, computing and drive technology are becoming ever more closely integrated – and functional safety must evolve alongside them.”

The examples on the following page illustrate how maxon supports customers across this spectrum – from basic functional safety to advanced safe motion solutions.

© 2026 maxon. All rights reserved.

Terminology

Basic functional safety

- STO – Safe Torque Off
  Safely removes motor torque.
- SBC – Safe Brake Control
  Safely controls the holding brake.

Advanced functional safety

- SLS – Safe Limited Speed
  Monitors a predefined maximum speed.
- SOS – Safe Operating Stop
  Safely maintains the axis in position without disabling the control loop.
- SDI – Safe Direction
  Monitors the permitted direction of movement.
- SSM – Safe Speed Monitor
  Continuously monitors the actual speed.
- FSoE – Fail Safe over EtherCAT
  Functional safety communication over the EtherCAT network.

Next generation

- New Safe Motion functions
- Humanoid robots and next-generation robotics
- Developed together with customers

Normal operation

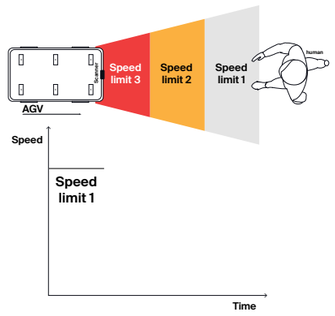

Safe Limited Speed (SLS)

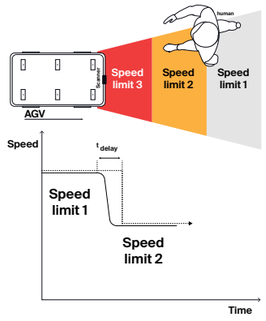

Safe Operating Stop (SOS)

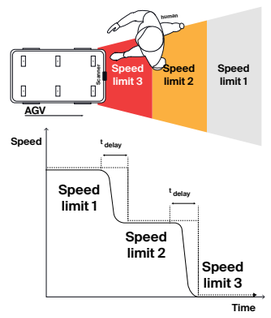

© 2026 maxon. All rights reserved.

Functional safety technology

Standards, processes, and terminology: maxon supports customers in defining appropriate measures for functional safety in their specific application, in compliance with the relevant standards.

Basic terminology and definitions of functional safety in machinery

- DIN EN IEC 61508
- EN ISO 13849

Safety-relevant drives
- DIN EN 61800-5-2

Safety-relevant control systems
- EN ISO 13849
- EN 62061-1/2

Application-specific safety requirements of the customer application
- E.g., ISO 3691-4

Risk assessment process (EN ISO 13849-1)

Risk assessment and the determination of the Safety Integrity Level or Performance Level are two processes that aid in defining appropriate functional safety architectures. The required safety level depends on the risk and therefore on the application.

EN ISO 13849-1 focuses on the safety-related parts of controllers (SRP/CS) for machinery. The risk assessment process determines the required performance level (PL_r) for each safety function. It is based on the severity of the potential harm and the probability of its occurrence.

The steps are:
1. Identification of hazards and safety functions
2. Evaluation of the risk parameters for each hazard
3. Determination of the required performance level (PLr)
4. Design and verification of the safety-related control system

Risk estimation

To calculate the performance level required (PL_r)

S Severity of injury
S_1 Slight (normally reversible injury)
S_2 Serious (normally irreversible injury or death)

F Frequency and/or exposure to hazard
F_1 Seldom to less often and/or exposure is short
F_2 Frequent to continuous and/or exposure time is long

P Possibility of avoiding hazard of limiting harm
P_1 Possible under specific conditions
P_2 Scarcely possible

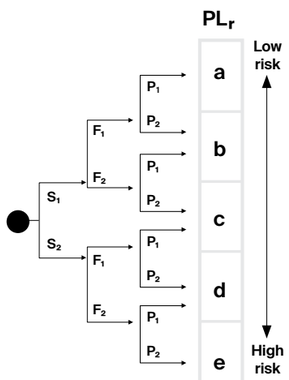

© 2026 maxon. All rights reserved.

Safety integrity level (SIL) vs. performance level (PL)

While the standards IEC 61508 and IEC 62061 use the term safety integrity level to classify the required safety level, ISO 13849 uses the term performance level. Although the standards do not use the same terminology, their implications can be mapped and compared as shown in the following table.

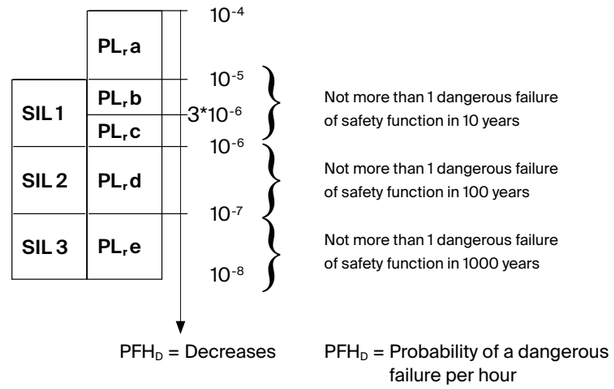

Explanation of terms

Basic functional safety:
Covers functions such as STO (Safe Torque Off) and SBC (Safe Brake Control) for the safe shutdown of drives.

Advanced functional safety:
Includes a range of more complex functions for functionally safe motion control (safe motion) that provide sensor-based dynamic protection.

Examples include:
- SLS – Safe Limited Speed
- SS1/SS2 – Safe Stop 1/Safe Stop 2
- SOS – Safe Operating Stop
- SDI – Safe Direction
- SMS – Safe Maximum Speed
- SSM – Safe Speed Monitor
- SLP – Safe Limited Position
- SLT – Safe Limited Torque
- SBT – Safe Brake Test

Safe Torque Off (STO)

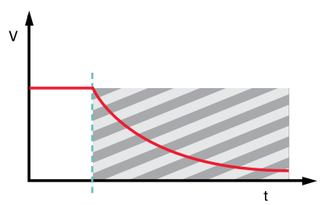

Safe Operating Stop (SOS)

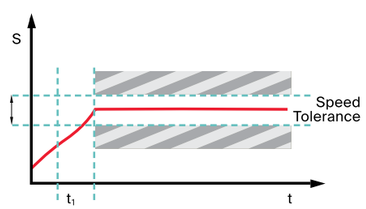

Safe Limited Speed (SLS)

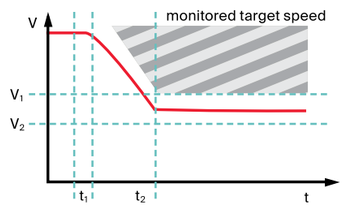

© 2026 maxon. All rights reserved.

To meet the wide range of requirements, maxon offers three flexible system architectures that seamlessly integrate functional safety:

Traditional architecture with safety via I/O

A proven, robust approach in which safety functions are implemented via conventional input/output interfaces. Ideal for simple AGV and automation designs.

Compact systems with integrated master controller and drive

This solution was developed for small machines and lightweight robots and combines a master controller with integrated drive amplifiers. The result is a compact, efficient system enabling optimized design and faster deployment.

Safety via FSoE (FailSafe over EtherCAT)

For modern and demanding applications, this architecture uses FSoE for network-based secure communication, reducing wiring complexity, and enabling scalable, high-performance systems.

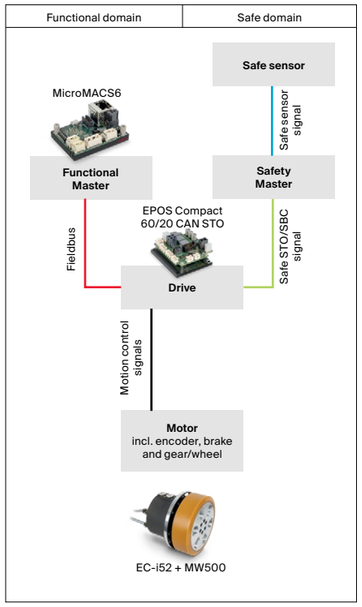

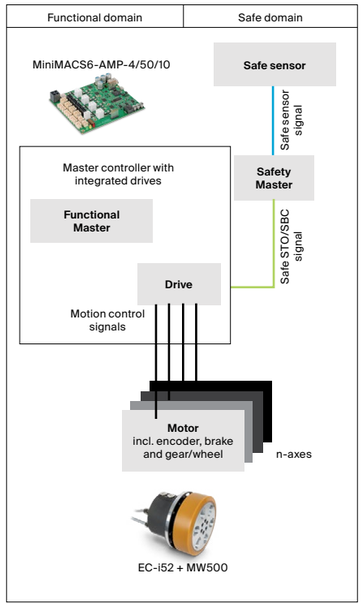

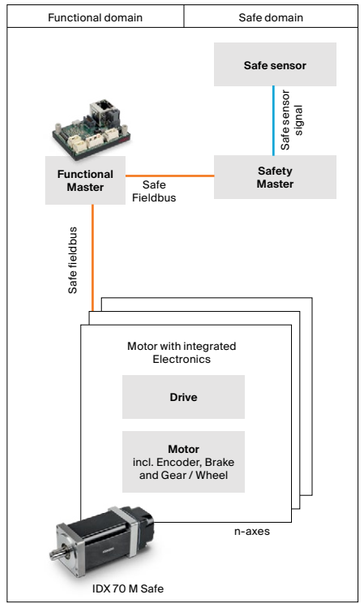

Fieldbus
Safe STO/SBC signal
Safe sensor signal
Motion control signals
Safe fieldbus

Your benefits: For AGVs, humanoids, cobots, or industrial automation alike, maxon architectures deliver future-proof solutions that meet the most stringent safety standards and help you build smarter and safer machines for dynamic markets.

© 2026 maxon. All rights reserved.
© 2026 maxon. All rights reserved.

© 2026 maxon. All rights reserved. 202610