maxon

Compact and highly efficient.

The maxon wheel drive for AGV and AMR.

Highly efficient

Compact

Modular

Easy to use

MW 500
maxon wheel drive
Payload per drive ≤500 kg

MW

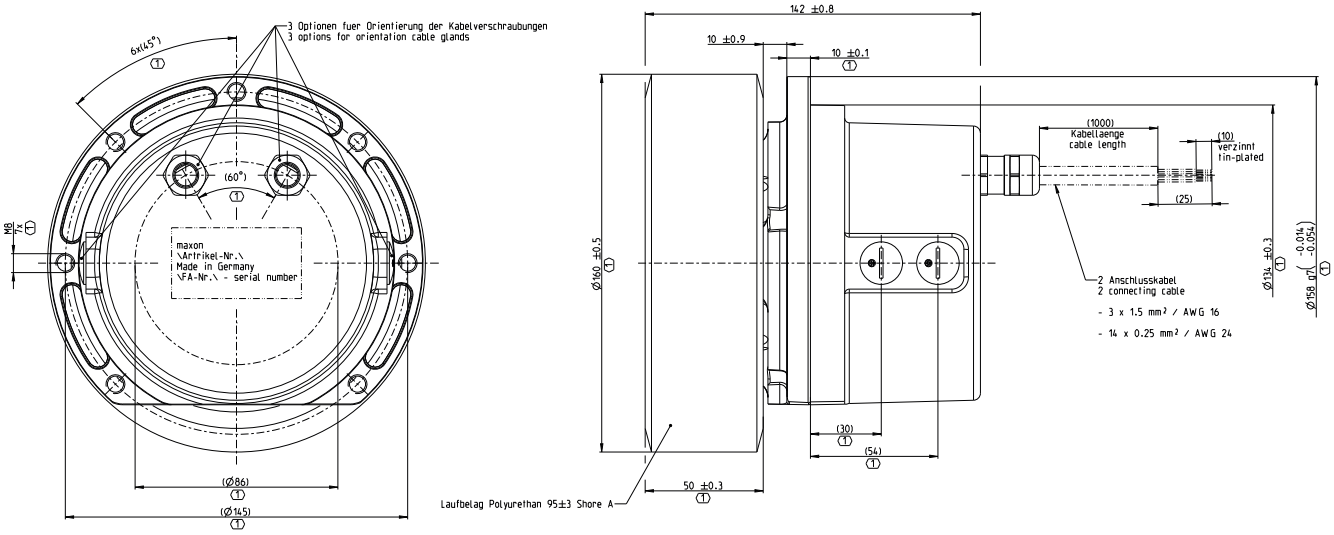

View without wheel:

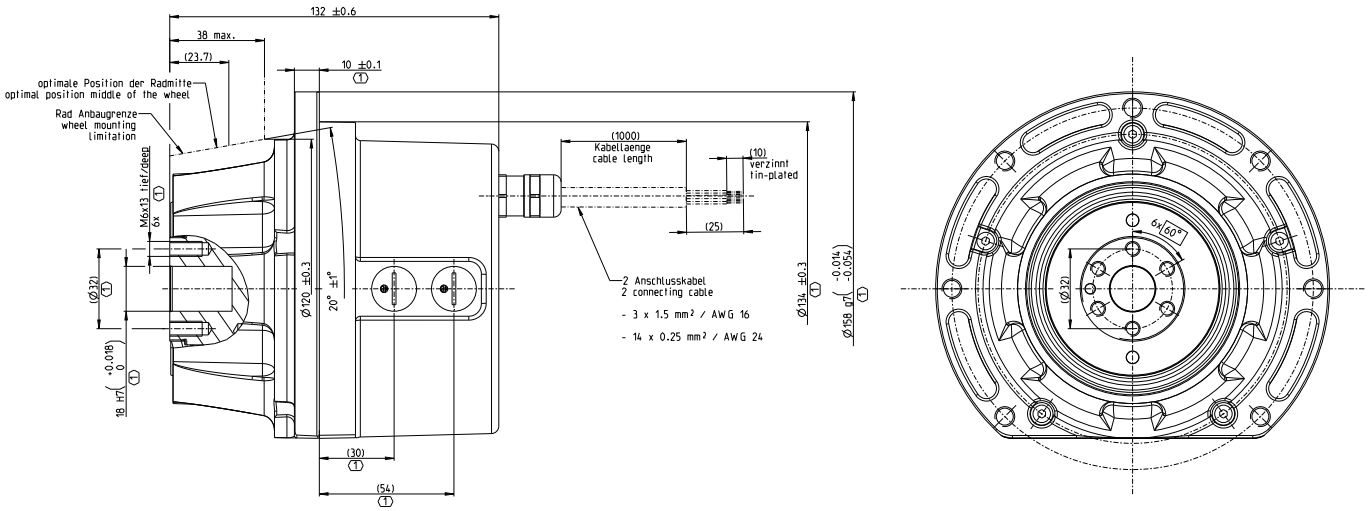

M 1:3

			Part Numbers			
			690662	680368	755530	777918
Specifications						
Wheel drive	Gear ratio	X:1	16	32	16	32
	Nominal voltage	VDC	30	30	48	48
	Nominal wheel speed @ nominal voltage	rpm	110	55	104	52
	Nominal current (max. rms current)	A	7.06	7.06	4.06	4.06
	Nominal wheel torque (max. continuous torque)	Nm	11.7	23.7	11.4	23.1
	Peak wheel torque < 5 sec (I2T shall be respected)	Nm	35	70	34	68
	Type of protection	IP	54 (optional 65)			
	Operating temperature	°C	0...+50			
	Basic weight incl. wheel 160	kg	6.5			
	Max. radial load	kg	500			
Wheel	Wheel diameter (and customized)	mm	160			
Holding Brake (integrated)	Braking torque 24 VDC (reduced losses at 12 V)	Nm W	min. 32 (<< 3)	min. 64 (<< 3)	min. 32 (<< 3)	min. 64 (<< 3)
Encoder (integrated Hall Sensors)	Signal line (single ended)	signal	H1, H2, H3			
Encoder (integrated)	Counts per turn	cpt	1024			
BLDC Controller (integrated)	Interface (under development)	bus	CANopen			
BLDC Controller (extern, e.g. EPOS4/MiniMACS)	Interface	bus	CANopen and EtherCAT			

Preliminary - All data depending on winding configuration and voltage level. Data under the condition of unit mouted on sufficient heat sink. Nominal values valid for 25°C ambient temperature. If the unit is run above 25°C ambient temperature, nominal values are reduced.